GPS
MONACO Group
Home Equipment

# Coolers Catalog

F

39dB

## Capacity:

-Storage Capacity(750ml): 20Bottles

-Net Capacity: 59L

-Unit Size: W295xD575xH820mm

-Humidity Range: 50%-80%RH

# **Wine Coolers** | Built-under | Classic

45 Degree Corner SST Door

Full Glass Door

Wire Shelf

## ■ Performance

-Temp.Zone: Single Zone
-ERP Class/Noise(dB(A)): F/39
-Temp.Range: 5-20℃

## ■ Packing/Loading

-Packing Size:
W329xD625xH865mm
-20'GP/40'HQ(pcs): 148/397

## ■ Common Features

-Foaming Agent/Refrigerant:
C-Pentane/R600a
-Control Type/Memory:
Touch Control/Yes
-UV-Prool Glass:
Yes,℃/ ℉ Switch,Yes
-Defrost Type: Auto-defrost
-Climate Type: SN,N,ST
-100% CFC/HFC Free

## ■ Features

-Cooling System: Comp/Fan Cooling
-Compressor: Huayi
-Air Ventilation: By Plinth Vent Grille
-Door Frame/Glass:
Full Glass/Single Low-E
3-Layer Tempered Clear Glass
-Reversible Door: Yes
-Handle Type: SST
-Shelf: 5 Beech Shelves
-Display: Blue/White LED Display
-Lighting: White On Top
-Winter Care: N/A
-Cabinet/Plinth Vent Grille Color:
Black/Black
-Certificates: CB/CE/RoHS/REACH

## ■ Extra Options

-Lock&Key: Option
-Carbon Filter: Option

## ■ Bottle Loading Drawing

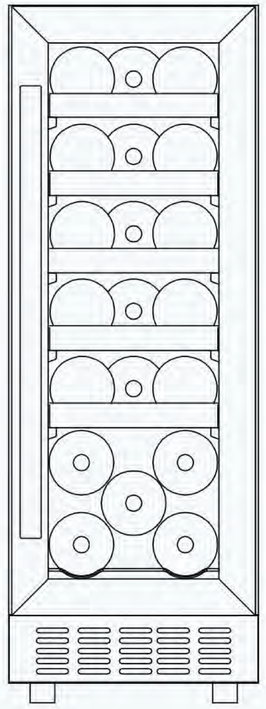

## ■ Installation Drawing:Built-under

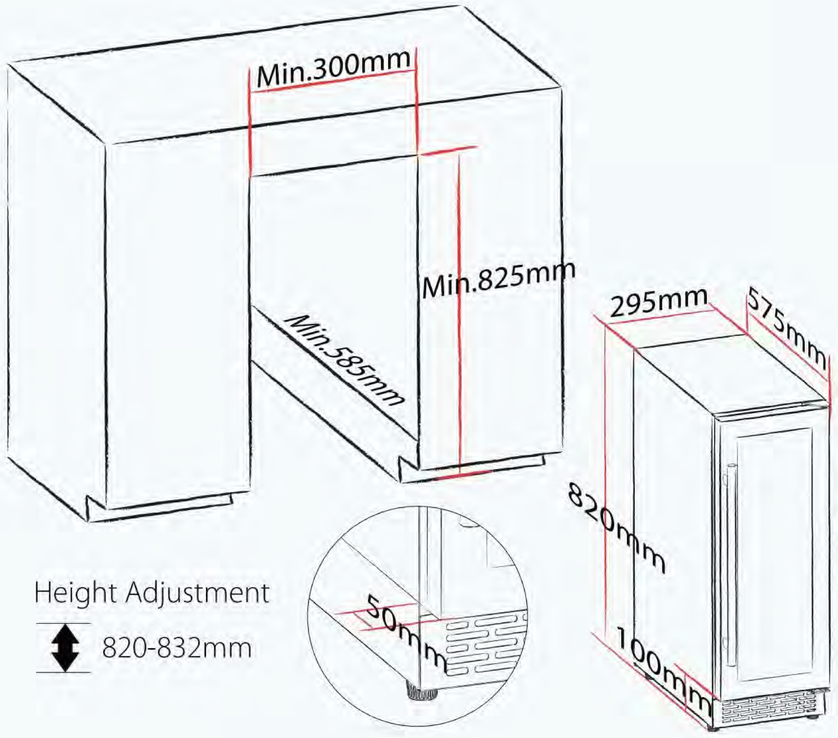


Height Adjustment
820-832mm

ENERG

## Capacity:

-Storage Capacity(750ml): 33Bottles

-Net Capacity: 90L

-Unit Size: W380xD585xH870mm

-Humidity Range: 50%-80%RH

# **Wine Coolers** | Built-under | Classic

45 Degree Corner SST Door

Full Glass Door

Wire Shelf

## ■ Performance

-Temp.Zone: Single Zone
-ERP Class/Noise(dB(A)): DOE/39
-Temp.Range: 5-20℃

## ■ Packing/Loading

-Packing Size:
W440xD655xH930mm
-20'GP/40'HQ(pcs): 123/292

## ■ Common Features

-Foaming Agent/Refrigerant:
C-Pentane/R600a
-Control Type/Memory:
Touch Control/Yes
-UV-Prool Glass:
Yes,℃/ ℉ Switch:Yes
-Defrost Type: Auto-defrost
-Climate Type: SN,N,ST
-100% CFC/HFC Free

## ■ Features

-Cooling System: Comp/Fan Cooling
-Compressor: Jiaxipera
-Air Ventilation: By Plinth Vent Grille
-Door Frame/Glass:
Full Glass/2-Layer,Tempered Clear Glass
-Reversible Door: Yes
-Handle Type: SST
-Shelf: 6 Beech Shelves
-Display: Blue/White LED Display
-Lighting: White On Top
-Winter Care: N/A
-Cabinet/Plinth Vent Grille Color:
Black/Black
-Certificates: CB/CE/ETL/RoHS/REACH

## ■ Extra Options

-Lock&Key: Option
-Carbon Filter: Option

## ■ Bottle Loading Drawing

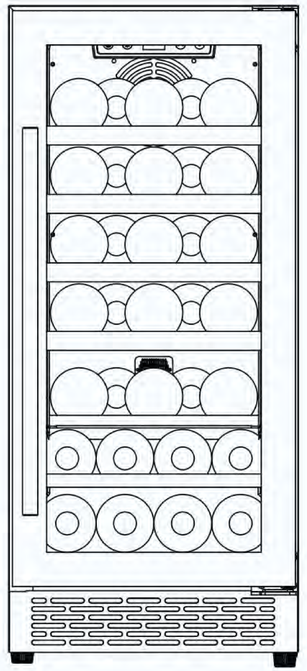

## ■ Installation Drawing:Built-under

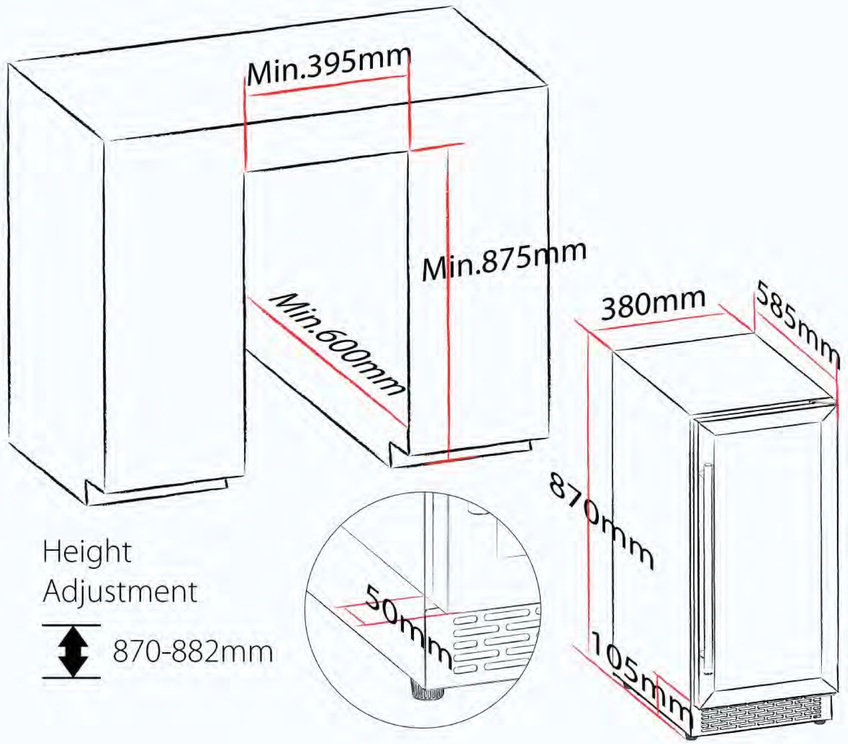

39dB

## Capacity:

-Storage Capacity(750ml): 31Bottles

-Net Capacity: 85L

-Unit Size: W380xD585xH870mm

-Humidity Range: 50%-80%RH

# **Wine Coolers** | Built-under | Classic

Full Glass Door

Seamless SST Door

Wire Shelf

## ■ Performance

-Temp.Zone: Duel Zone
-ERP Class/Noise(dB(A)): G/39
-Temp.Range: Upper 5-12℃
Lower 12-20℃

## ■ Packing/Loading

-Packing Size:
W410xD655xH930mm
-20'GP/40'HQ(pcs): 123/292

## ■ Common Features

-Foaming Agent/Refrigerant:
C-Pentane/R600a
-Control Type/Memory:
Touch Control/Yes
-UV-Prool Glass:
Yes,℃/ ℉ Switch:Yes
-Defrost Type: Auto-defrost
-Climate Type: SN,N,ST
-100% CFC/HFC Free

## ■ Features

-Cooling System: Comp/Fan Cooling
-Compressor: Huayi
-Air Ventilation: By Plinth Vent Grille
-Door Frame/Glass:
Golden SST/3-Layer,Tempered Mirror Glass
-Reversible Door: Yes
-Handle Type: SST/Black
-Shelf: 5 Beech Shelves
-Display: Blue/White LED Display
-Lighting: White On Top
-Winter Care: Yes
-Cabinet/Plinth Vent Grille Color:
Black/Black
-Certificates: CB/CE/ETL/RoHS/REACH

## ■ Extra Options

-Lock&Key: Option
-Carbon Filter: Option

## ■ Bottle Loading Drawing

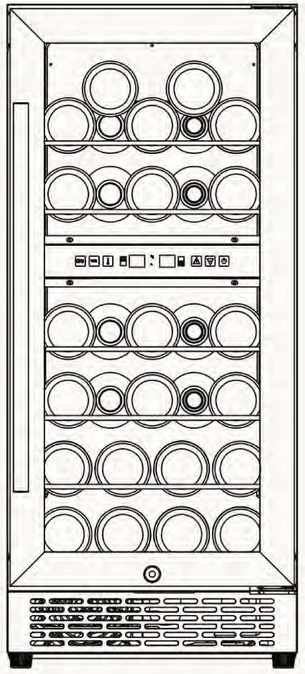

## ■ Installation Drawing:Built-under

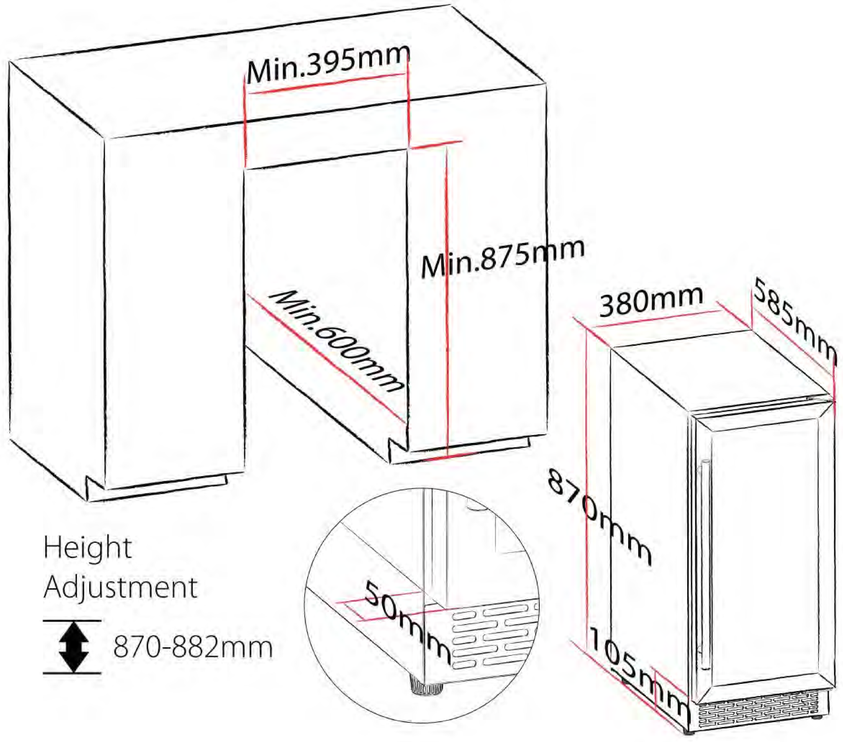

# **Wine Coolers** | Built-under | Classic

F

36dB

## Capacity:

-Storage Capacity(750ml): 53Bottles

-Net Capacity: 135L

-Unit Size: W595xD575xH820mm

-Humidity Range: 50%-80%RH

45 Degree Corner SST Door

Full Glass Door

Wire Shelf

## ■ Performance

-Temp.Zone: Single Zone
-ERP Class/Noise(dB(A)): F/36
-Temp.Range: 5-20°C

## ■ Packing/Loading

-Packing Size:
W560xD675xH880mm
-20'GP/40'HQ(pcs): 54/114

## ■ Common Features

-Foaming Agent/Refrigerant:
C-Pentane/R600a
-Control Type/Memory:
Touch Control/Yes
-UV-Proof Glass:
Yes,℃/ ℉ Switch:Yes
-Defrost Type: Auto-defrost
-Climate Type: SN,N,ST
-100% CFC/HFC Free

## ■ Features

-Cooling System: Comp/Fan Cooling
-Compressor: Inverter/ Jiaxipera
-Air Ventilation: By Plinth Vent Grille
-Door Frame/Glass:
Full Glass/Double Low-E
3-Layer Tempered Light Blue Glass
-Reversible Door: Yes
-Handle Type: SST
-Shelf: 5 Beech Shelves
-Display: Blue/White LED Display
-Lighting: White On Top
-Winter Care: Option
-Cabinet/Plinth Vent Grille Color:
Black/Black
-Certificates: CB/CE/ROHS/REACH

## ■ Extra Options

-Lock&Key: Option
-Carbon Filter: Option

## ■ Bottle Loading Drawing

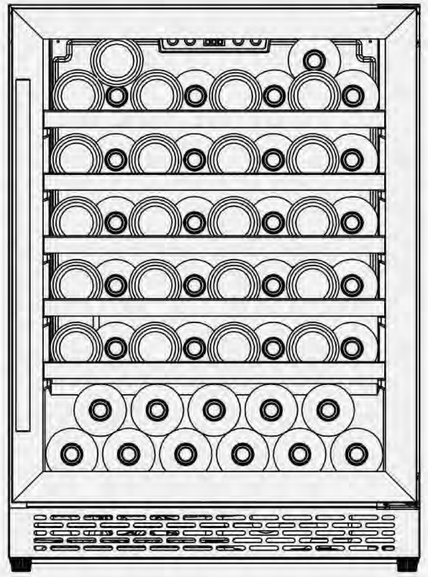

## ■ Installation Drawing:Built-under

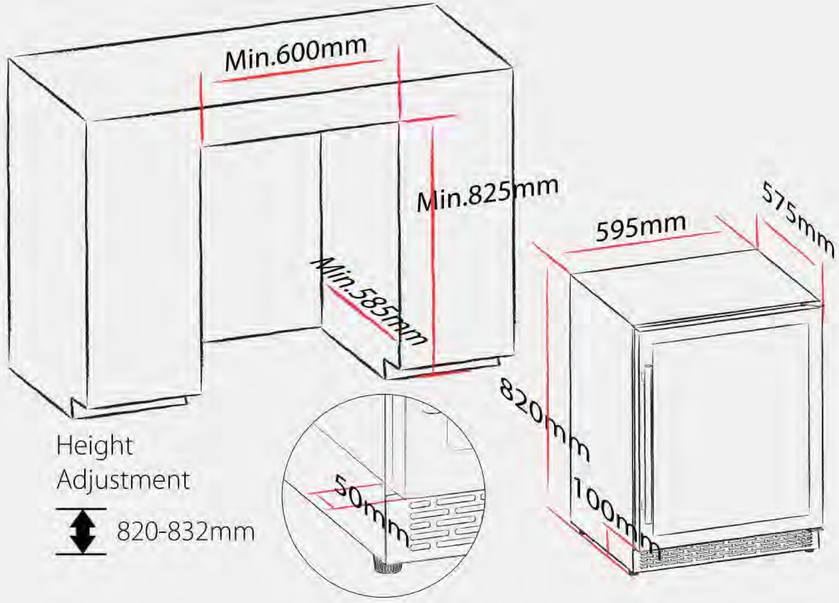

39dB

## Capacity:

-Storage Capacity(750ml): 49Bottles

-Net Capacity: 129L

-Unit Size: W595xD575xH820mm

-Humidity Range: 50%-80%RH

45 Degree Corner SST Door

Full Glass Door

Chrome Shelf

## ■ Performance

-Temp.Zone: Dual Zone
-ERP Class/Noise(dB(A)): G/39
-Temp.Range: Upper 5-12℃
Lower 12-20℃

## ■ Packing/Loading

-Packing Size:
W650xD625xH880mm
-20'GP/40'HQ(pcs): 54/ 170

## ■ Common Features

-Foaming Agent/Refrigerant:
C-Pentane/R600a
-Control Type/Memory:
Touch Control/Yes
-UV-Prool Glass:
Yes,℃/ ℉ Switchives
-Defrost Type: Auto-defrost
-Climate Type: SN,N,ST
-100% CFC/HFC Free

## ■ Features

-Cooling System: Comp/Fan Cooling
-Compressor: Jiaxipera
-Air Ventilation: By Plinth Vent Grille
-Door Frame/Glass:
Full Glass 2-Layer Tempered Clear Glass
-Reversible Door: Yes
-Handle Type: S-ST
-Shelf: 4 Beech Shelves
-Display: Blue/White LED Display
-Lighting: White On Top
-Winter Care: Yes
-Cabinet/Plinth Vent Grille Color:
Black/Black
-Certificates: CB/CE/RoHS/REACH

## ■ Extra Options

-Lock&Key: Option
-Carbon Filter: Option

## ■ Bottle Loading Drawing

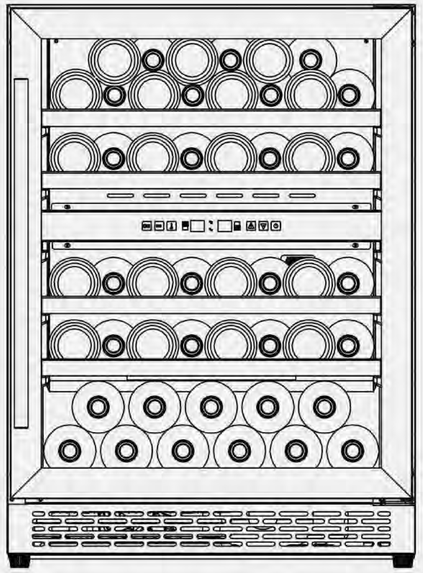

## ■ Installation Drawing:Built-under

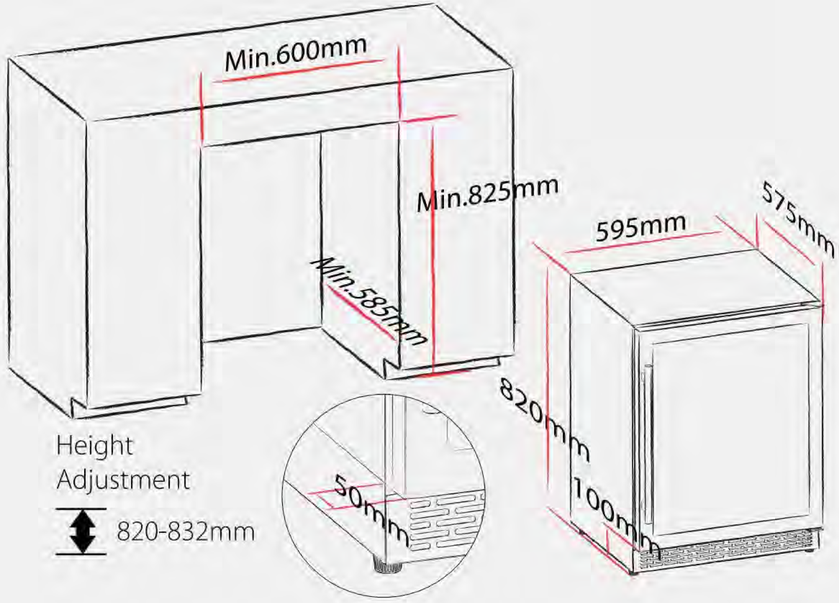

# **Wine Coolers** | Built-under | Classic

F

36dB

## Capacity:

-Storage Capacity(750ml): 49Bottles

-Net Capacity: 129L

-Unit Size: W595xD575xH820mm

-Humidity Range: 50%-80%RH

45 Degree Corner SST Door

Full Glass Door

Chrome Shelf

## ■ Performance

-Temp.Zone: Dual Zone
-ERP Class/Noise(dB(A)): F/36
-Temp.Range: Upper 5-12℃
Lower 12-20℃

## ■ Packing/Loading

-Packing Size:
W650xD625xH880mm
-20'GP/40'HQ(pcs): 54/ 170

## ■ Common Features

-Foaming Agent/Refrigerant:
C-Pentane/R600a
-Control Type/Memory:
Touch Control/Yes
-UV-Prool Glass:
Yes,℃/ ℉ Switch:Yes
-Defrost Type: Auto-defrost
-Climate Type: SN,N,ST
-100% CFC/HFC Free

## ■ Features

-Cooling System: Comp/Fan Cooling
-Compressor: Jinverter/Jiaxipera
-Air Ventilation: By Plinth Vent Grille
-Door Frame/Glass:
Full Glass/Double Low-E
4-Layer Tempered Light Blue Glass
-Reversible Door: Yes
-Handle Type: SST
-Shelf: 4 Beech Shelves
-Display: Blue/White LED Display
-Lighting: White On Top
-Winter Care: Yes
-Cabinet/Plinth Vent Grille Color:
Black/Black
-Certificates: CB/CE/RoHS/REACH

## ■ Extra Options

-Lock&Key: Option
-Carbon Filter: Option

## ■ Bottle Loading Drawing

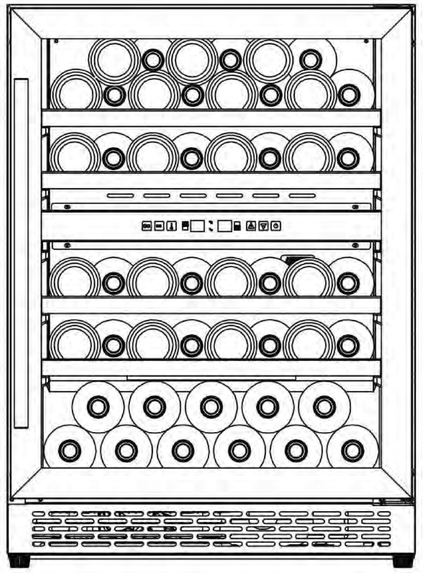

## ■ Installation Drawing:Built-under

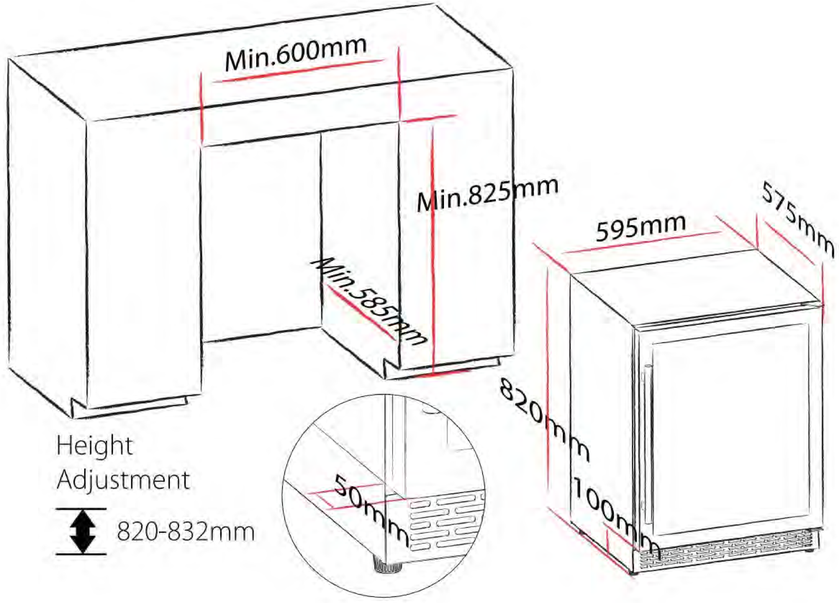

# **Wine Coolers** | Built-under | Classic

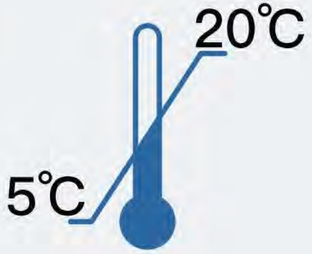


## Capacity:

-Storage Capacity(750ml): 49Bottles

-Net Capacity: 129L

-Unit Size: W595xD575xH820mm

-Humidity Range: 50%-80%RH

45 Degree Corner SST Door

Full Glass Door

Wire Shelf

## ■ Performance

-Temp.Zone: Dual Zone
-ERP Class/Noise(dB(A)): F/36
-Temp.Range: Upper 5~20℃
Lower 0~20℃

## ■ Packing/Loading

-Packing Size:
W650xD625xH880mm
-20'GP/40'HQ(pcs): 54/ 170

## ■ Common Features

-Foaming Agent/Refrigerant:
C-Pentane/R600a
-Control Type/Memory:
Touch Control/Yes
-UV-Proof Glass:
Yes,℃/ ℉ Switch:Yes
-Defrost Type: Auto-defrost
-Climate Type: SN,N,ST
-100% CFC/HFC Free

## ■ Features

-Cooling System: Comp/Fan Cooling
-Compressor: Inverter/Danfoss
-Air Ventilation: By Plinth Vent Grille
-Door Frame/Glass:
Full Glass/Double Low-E
4-Layer Tempered Dark Blue Glass
-Reversible Door: Yes
-Handle Type: SST
-Shelf: 4 Beech Shelves
-Display: Blue/White LED Display
-Lighting: White On Top
-Winter Care: Yes
-Cabinet/Plinth Vent Grille Color:
Black/Black
-Certificates: CB/CE/RoHS/REACH

## ■ Extra Options

-Lock&Key: Option
-Carbon Filter: Option

## ■ Bottle Loading Drawing

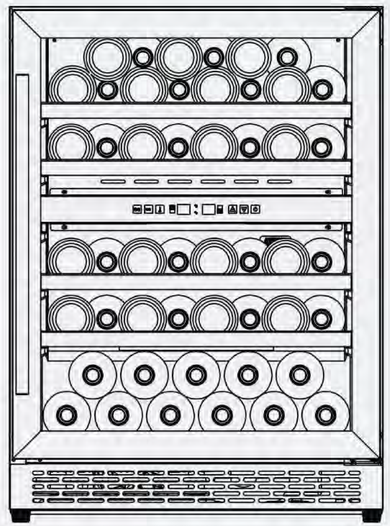

## ■ Installation Drawing:Built-under

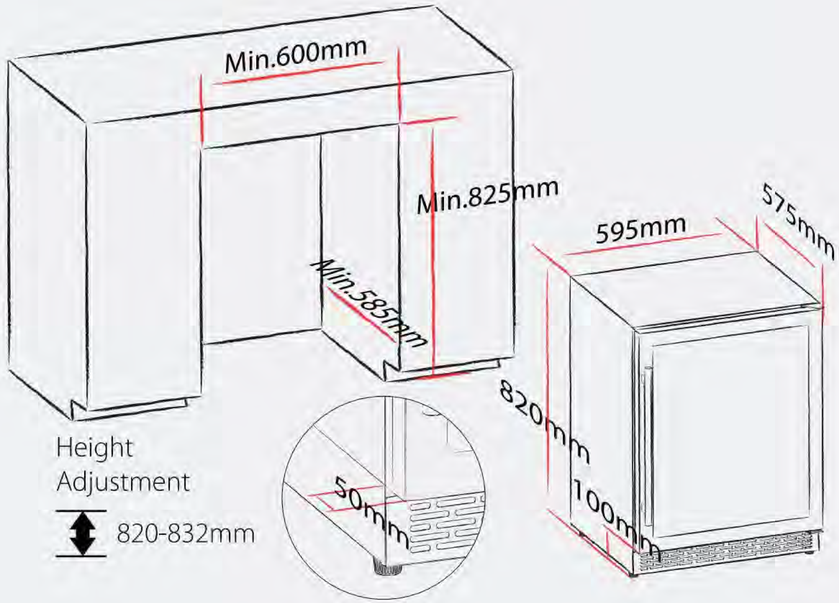

# **Wine Coolers** | Built-under | Classic

ENERG

## Capacity:

-Storage Capacity(750ml): 53Bottles

-Net Capacity: 148L

-Unit Size: W598xD585xH870mm

-Humidity Range: 50%-80%RH

Full Glass Door

Seamless SST Door

Mirror Glass Door/Wire Shelf

## ■ Performance

-Temp.Zone: Single Zone
-ERP Class/Noise(dB(A)): D/E/39
-Temp.Range: 5-20°C

## ■ Packing/Loading

-Packing Size:
W650xH845xD910mm
-20'GP/40'HQ(pcs): 54/152

## ■ Common Features

-Foaming Agent/Refrigerant:
C-Pentane/R600a
-Control Type/Memory:
Touch Control/Yes
-UV-Prool Glass:
Yes,℃/ ℉ Switch:Yes
-Defrost Type: Auto-defrost
-Climate Type: SN,N,ST
-100% CFC/HFC Free

## ■ Features

-Cooling System: Comp/Fan Cooling
-Compressor: Jiakipera
-Air Ventilation: By Plinth Vent Grille
-Door Frame/Glass:
Full Glass/2-Layer Tempered Clear Glass
-Reversible Door: Yes
-Handle Type: SST
-Shelf: 5 Beech Shelves
-Display: Blue/White LED Display
-Lighting: White On Top
-Winter Care: Option
-Cabinet/Plinth Vent Grille Color:
Black/Black
-Certificates: CB/CE/ETL/RoHS/REACH

## ■ Extra Options

-Lock&Key: Option
-Carbon Filter: Option

## ■ Bottle Loading Drawing

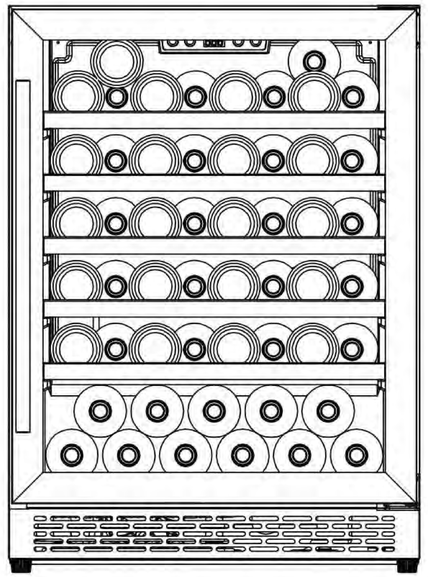

## ■ Installation Drawing:Built-under

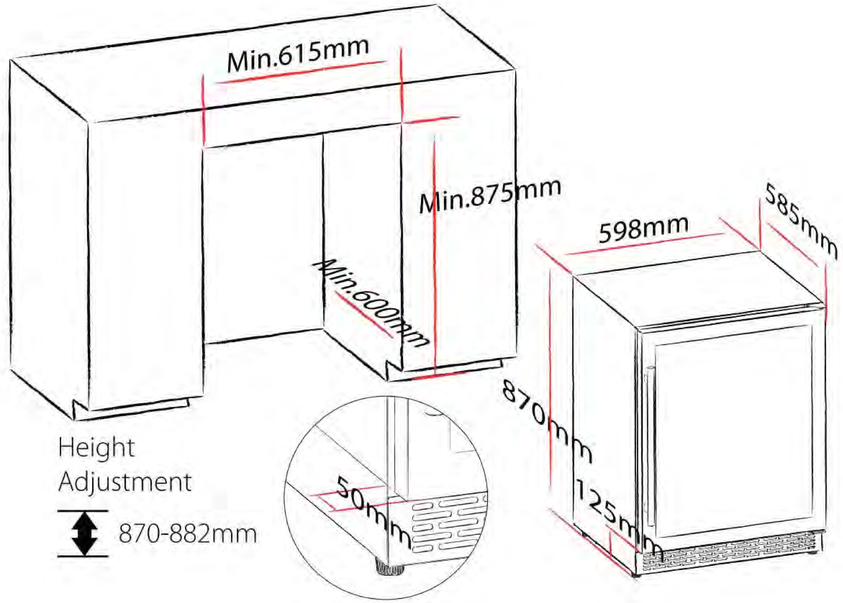

# **Wine Coolers** | Built-under | Classic

## Capacity:

-Storage Capacity(750ml): 49Bottles

-Net Capacity: 139L

-Unit Size: W598xD585xH870mm

-Humidity Range: 50%-80%RH

45 Degree Corner SST Door

Full Glass Door

Wire Shelf

## ■ Performance

-Temp.Zone: Dual Zone
-ERP Class/Noise(dB(A)): D0L / 39
-Temp.Range: Upper 5-12℃
Lower 12-20℃

## ■ Packing/Loading

-Packing Size:
W650xD615xH910mm
-20'GP/40'HQ(pcs): 54 / 152

## ■ Common Features

-Foaming Agent/Refrigerant:
C-Pentane/R600a
-Control Type/Memory:
Touch Control/Yes
-UV-Prool Glass:
Yes,℃/ ℉ Switch:Yes
-Defrost Type: Auto-defrost
-Climate Type: SN,N,ST
-100% CFC/HFC Free

## ■ Features

-Cooling System: Comp/Fan Cooling
-Compressor: Jiaxipera
-Air Ventilation: By Plinth Vent Grille
-Door Frame/Glass:
Golden SST/2-Layer,Tempered Mirror Glass
-Reversible Door: Yes
-Handle Type: SST/Black
-Shelf: 4 Beech Shelves
-Display: Blue/White LED Display
-Lighting: White On Top
-Winter Care: Yes
-Cabinet/Plinth Vent Grille Color:
Black/Black
-Certificates: CB/CE/ETL/RoHS/REACH

## ■ Extra Options

-Lock&Key: Option
-Carbon Filter: Option

## ■ Bottle Loading Drawing

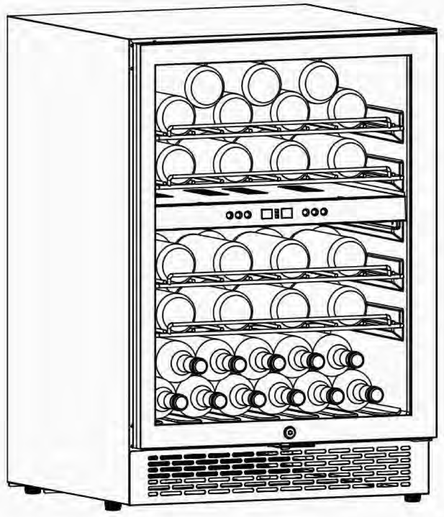

## ■ Installation Drawing:Built-under

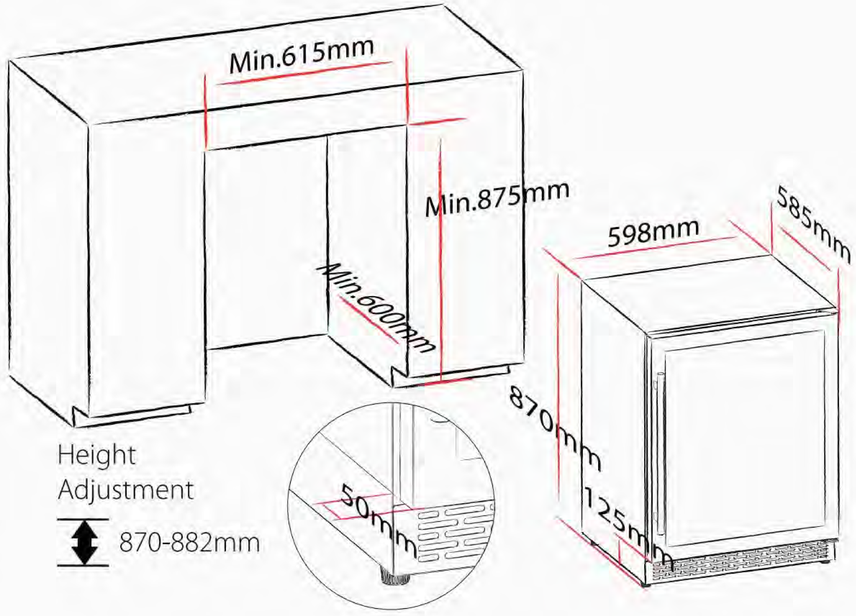

# Wine Coolers | Built-under | Classic

## Capacity:

-Storage Capacity(750ml): 40Bottles

-Net Capacity: 118L

-Unit Size: W595xD575xH820mm

-Humidity Range: 50%-80%RH

45 Degree Corner SST Door

Full Glass Door

Wire Shelf

## ■ Performance

-Temp.Zone: Duel Zone
-ERP Class/Noise(dB(A)): D0t /39
-Temp.Range: Left 5~20℃
Right 5~20℃

## ■ Packing/Loading

-Packing Size:
W650xD625xH880mm
-20'GP/40'HQ(pcs): 54/170

## ■ Common Features

-Foaming Agent/Refrigerant:
C-Pentane/R600a
-Control Type/Memory:
Touch Control/Yes
-UV-Prool Glass:
Yes,℃/ ℉ Switch:Yes
-Defrost Type: Auto-defrost
-Climate Type: SN,N,ST
-100% CFC/HFC Free

## ■ Features

-Cooling System: Comp/Fan Cooling
-Compressor: Jiaxipera
-Air Ventilation: By Plinth Vent Grille
-Door Frame/Glass:
Full Glass/2-Layer Tempered Clear Glass
-Reversible Door: Yes
-Handle Type: SST
-Shelf: 10 Beech Shelves
-Display: Blue/White LED Display
-Lighting: White On Top
-Winter Care: Yes
-Cabinet/Plinth Vent Grille Color:
Black/Black
-Certificates: CB/CE/ETL/RoHS/REACH

## ■ Extra Options

-Lock&Key: Option
-Carbon Filter: Option

## ■ Bottle Loading Drawing

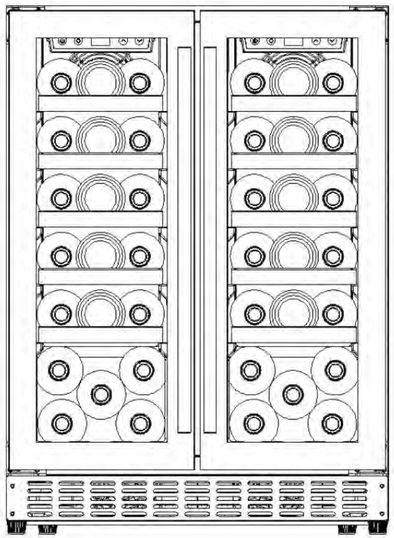

## ■ Installation Drawing:Built-under

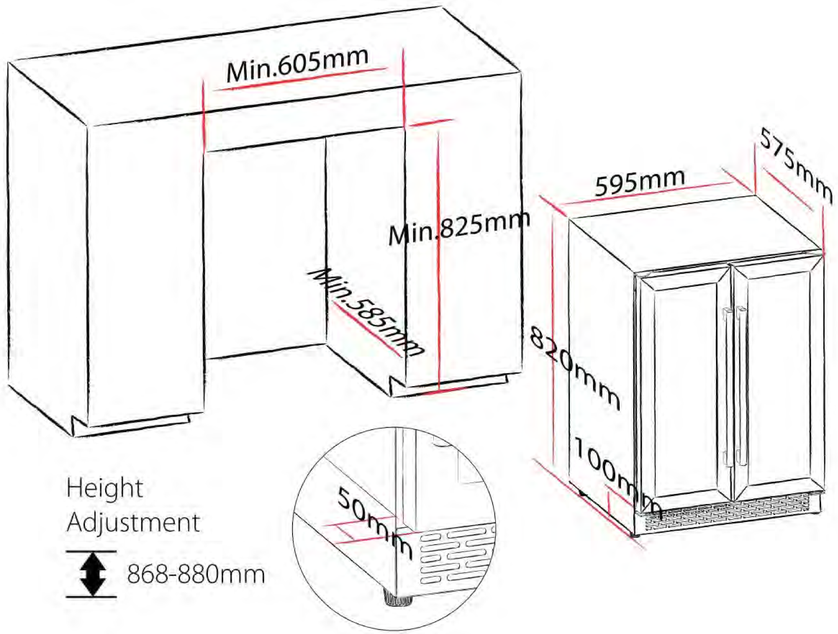

# **Wine Coolers** | Built-under | Classic

## Capacity:

-Storage Capacity(750ml): 40Bottles

-Net Capacity: 118L

-Unit Size: W598xD585xH868mm

-Humidity Range: 50%-80%RH

45 Degree Corner SST Door

Full Glass Door

Wire Shelf

## ■ Performance

-Temp.Zone: Dual Zone
-ERP Class/Noise(dB(A)): DOE/39
-Temp.Range: Left 5-20℃
Right 5-20℃

## ■ Packing/Loading

-Packing Size:
W650xD645xH910mm
-20'GP/40'HQ(pcs): 54 / 152

## ■ Common Features

-Foaming Agent/Refrigerant:
C-Pentane/R600a
-Control Type/Memory:
Touch Control/Yes
-UV-Prool Glass:
Yes,℃/ ℉ Switch:Yes
-Defrost Type: Auto-defrost
-Climate Type: SN,N,ST
-100% CFC/HFC Free

## ■ Features

-Cooling System: Comp/Fan Cooling
-Compressor: Jiaxipera
-Air Ventilation: By Plinth Vent Grille
-Door Frame/Glass:
Full Glass/2-Layer,Tempered Clear Glass
-Reversible Door: Yes
-Handle Type: SST
-Shelf: 10 Beech Shelves
-Display: Blue/White LED Display
-Lighting: White On Top
-Winter Care: Yes
-Cabinet/Plinth Vent Grille Color:
Black/Black
-Certificates: CB/CE/ETL/RoHS/REACH

## ■ Extra Options

-Lock&Key: Option
-Carbon Filter: Option

## ■ Bottle Loading Drawing

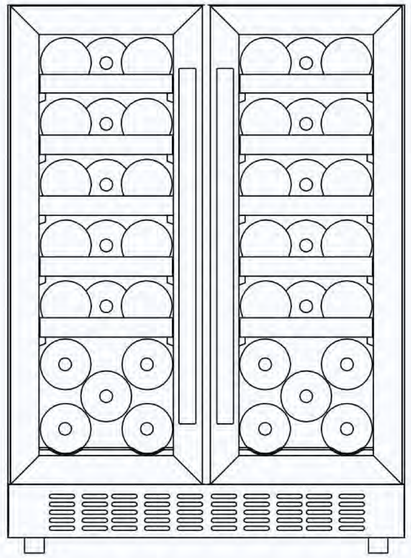

## ■ Installation Drawing:Built-under

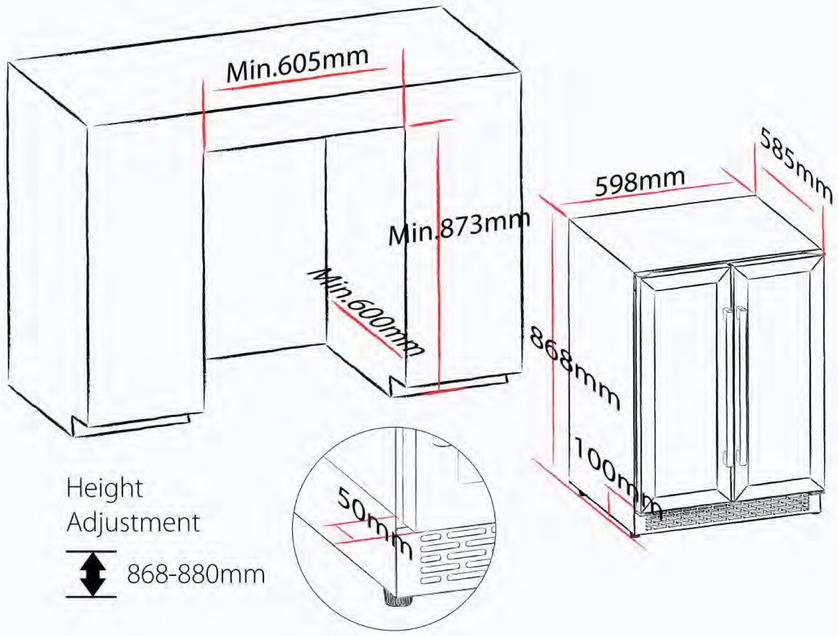

# **Wine Coolers** | Built-under | Classic

## Capacity:

-Storage Capacity(750ml): 66Bottles

-Net Capacity: 180L

-Unit Size: W760xD585xH870mm

-Humidity Range: 50%-80%RH

45 Degree Corner SST Door

Full Glass Door

## ■ Performance

-Temp.Zone: Dual Zone
-ERP Class/Noise(dB(A)): D0t /39
-Temp.Range: Left 5-20℃
right 5-20℃

## ■ Packing/Loading

-Packing Size:
W810xD645xH920mm
-20'GP/40'HQ(pcs): 50/143

## ■ Common Features

-Foaming Agent/Refrigerant:
C-Pentane/R600a
-Control Type/Memory:
Touch Control/Yes
-UV-Prool Glass:
Yes,℃/ ℉ Switch:Yes
-Defrost Type: Auto-defrost
-Climate Type: SN,N,ST
-100% CFC/HFC Free

## ■ Features

-Cooling System: Comp/Fan Cooling
-Compressor: Jiaxipera
-Air Ventilation: By Plinth Vent Grille
-Door Frame/Glass:
Golden SST/2-Layer,Tempered Mirror Glass
-Reversible Door: Yes
-Handle Type: SST/Black
-Shelf: 12 Beech Shelves
-Display: Blue/White LED Display
-Lighting: White On Top
-Winter Care: Yes
-Cabinet/Plinth Vent Grille Color:
Black/Black
-Certificates: CB/CE/ETL/RoHS/REACH

## ■ Extra Options

-Lock&Key: Option
-Carbon Filter: Option

## ■ Bottle Loading Drawing

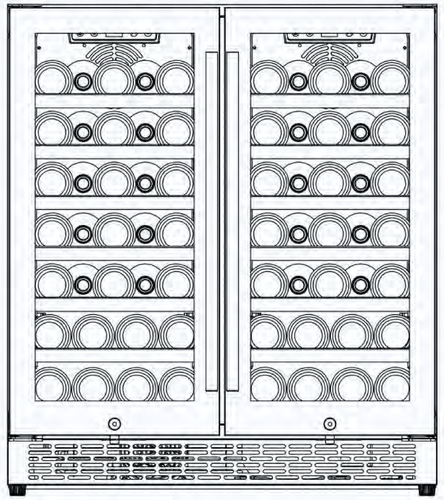

## ■ Installation Drawing:Built-under

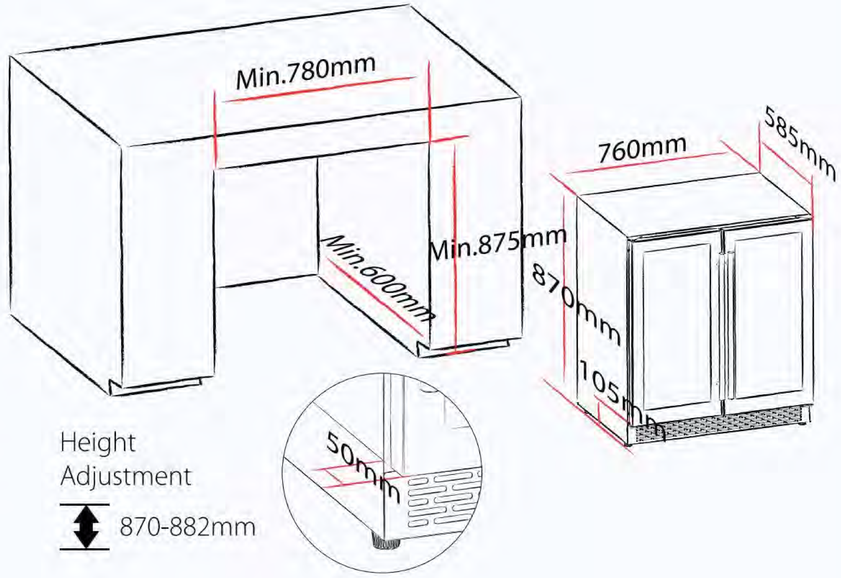

# **Wine Coolers** | Free Standing | Apex

G

39dB

## Capacity:

-Storage Capacity(750ml): 18Bottles

-Net Capacity: 45L

-Unit Size: W343xD475xH721mm

-Humidity Range: 50%-80%RH

Full Glass Door

Chrome Shelf

## ■ Performance

-Temp.Zone: Single Zone
-ERP Class/Noise(dB(A)): G/39
-Temp.Range: 5-20℃

## ■ Packing/Loading

-Packing Size:
W379xD575xH748mm
-20'GP/40'HQ(pcs): 190/461

## ■ Common Features

-Foaming Agent/Refrigerant:
C-Pentane/R600a
-Control Type/Memory:
Touch Control/Yes
-UV-Prool Glass:
Yes,℃/ ℉ Switch,Yes
-Defrost Type: Auto-defrost
-Climate Type: SN,N,ST
-100% CFC/HFC Free

## ■ Features

-Cooling System: Comp/Fan Cooling
-Compressor: Huayi
-Air Ventilation: By Both Side
-Door Frame/Glass:
Full Glass/2-Layer Tempered Clear Glass
-Reversible Door: Yes
-Handle Type: Recessed Handle
-Shelf: 3 Beech Shelves
-Display: Blue/White LED Display
-Lighting: White On Top
-Winter Care: N/A
-Cabinet/Plinth Vent Grille Color:
Black/N/A
-Certificates: CB/CE/RoHS/REACH

## ■ Extra Options

-Lock&Key: Option
-Carbon Filter: Option

## ■ Bottle Loading Drawing

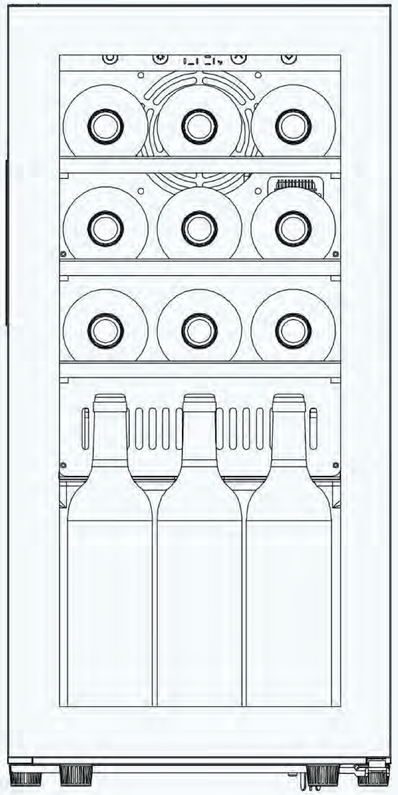

# **Wine Coolers** | Free Standing | Apex

G

39dB

## Capacity:

-Storage Capacity(750ml): 24Bottles

-Net Capacity: 60L

-Unit Size: W343xD475xH906mm

-Humidity Range: 50%-80%RH

Full Glass Door

Chrome Shelf

## ■ Performance

-Temp.Zone: Single Zone
-ERP Class/Noise(dB(A)): G/39
-Temp.Range: 5-20℃

## ■ Packing/Loading

-Packing Size:
W379xD525xH928mm
-20'GP/40'HQ(pcs): 152/384

## ■ Common Features

-Foaming Agent/Refrigerant:
C-Pentane/R600a
-Control Type/Memory:
Touch Control/Yes
-UV-Prool Glass:
Yes,℃/ ℉ Switch,Yes
-Defrost Type: Auto-defrost
-Climate Type: SN,N,ST
-100% CFC/HFC Free

## ■ Features

-Cooling System: Comp/Fan Cooling
-Compressor: Huayi
-Air Ventilation: By Both Side
-Door Frame/Glass:
Full Glass/2-Layer Tempered Clear Glass
-Reversible Door: Yes
-Handle Type: Recessed Handle
-Shelf: 5 Beech Shelves
-Display: Blue/White LED Display
-Lighting: White On Top
-Winter Care: N/A
-Cabinet/Plinth Vent Grille Color:
Black/N/A
-Certificates: CB/CE/RoHS/REACH

## ■ Extra Options

-Lock&Key: Option
-Carbon Filter: Option

## ■ Bottle Loading Drawing

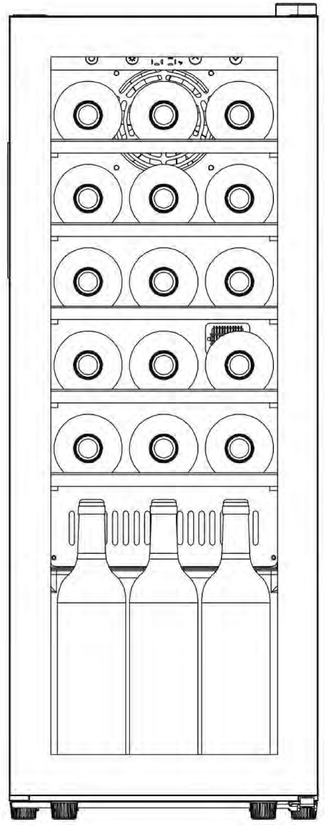

# **Wine Coolers** | Free Standing | Apex

## Capacity:

-Storage Capacity(750ml): 23Bottles

-Net Capacity: 75L

-Unit Size: W330xD475xH1030mm

-Humidity Range: 50%-80%RH

Full Glass Door

Wire Shelf

## ■ Performance

-Temp.Zone: Single Zone
-ERP Class/Noise(dB(A)): G/39
-Temp.Range: 5-20℃

## ■ Packing/Loading

-Packing Size:
W370xD575xH1070mm
-20'GP/40'HQ(pcs): 128/308

## ■ Common Features

-Foaming Agent/Refrigerant:
C-Pentane/R600a
-Control Type/Memory:
Touch Control/Yes
-UV-Prool Glass:
Yes,℃/ ℉ Switch,Yes
-Defrost Type: Auto-defrost
-Climate Type: SN,N,ST
-100% CFC/HFC Free

## ■ Features

-Cooling System: Comp/Fan Cooling
-Compressor: Huayi
-Air Ventilation: By Both Side
-Door Frame/Glass:
Full Glass/2-Layer Tempered Clear Glass
-Reversible Door: Yes
-Handle Type: Recessed Handle
-Shelf: 2 Beech Shelves+1 Combi.Shelf
-Display: Blue/White LED Display
-Lighting: White On Top
-Winter Care: N/A
-Cabinet/Plinth Vent Grille Color:
Black/N/A
-Certificates: CB/CE/RoHS/REACH

## ■ Extra Options

-Lock&Key: Option
-Carbon Filter: Option

## ■ Bottle Loading Drawing

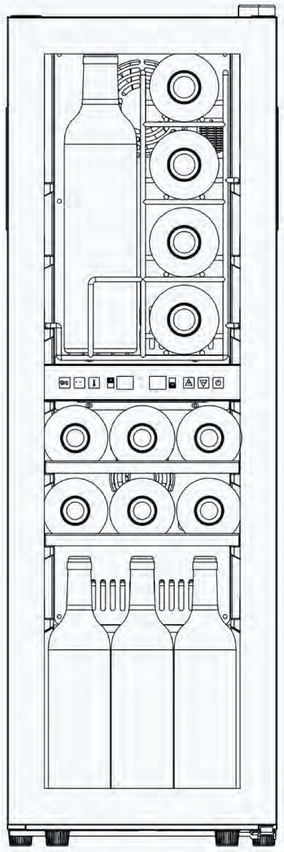

# **Wine Coolers** | Free Standing | Apex

G

39dB

## Capacity:

-Storage Capacity(750ml): 23Bottles

-Net Capacity: 72L

-Unit Size: W330xD475xH1030mm

-Humidity Range: 50%-80%RH

Full Glass Door

Wire Shelf

## ■ Performance

-Temp.Zone: Dual Zone
-ERP Class/Noise(dB(A)): G/39
-Temp.Range: Upper 5-12℃
Lower 12-20℃

## ■ Packing/Loading

-Packing Size:
W370xD525xH1070mm
-20'GP/40'HQ(pcs): 128/308

## ■ Common Features

-Foaming Agent/Refrigerant:
C-Pentane/R600a
-Control Type/Memory:
Touch Control/Yes
-UV-Prool Glass:
Yes,℃/ ℉ Switch:Yes
-Defrost Type: Auto-defrost
-Climate Type: SN,N,ST
-100% CFC/HFC Free

## ■ Features

-Cooling System: Comp/Fan Cooling
-Compressor: Huayi
-Air Ventilation: By Both Side
-Door Frame/Glass:
Full Glass/3-Layer Tempered Clear Glass
-Reversible Door: Yes
-Handle Type: Recessed Handle
-Shelf: 1 Beech Shelves+1 Combi Shelf
-Display: Blue/White LED Display
-Lighting: White On Top
-Winter Care: Yes
-Cabinet/Plinth Vent Grille Color:
Black/N/A
-Certificates: CB/CE/RoHS/REACH

## ■ Extra Options

-Lock&Key: Option
-Carbon Filter: Option

## ■ Bottle Loading Drawing

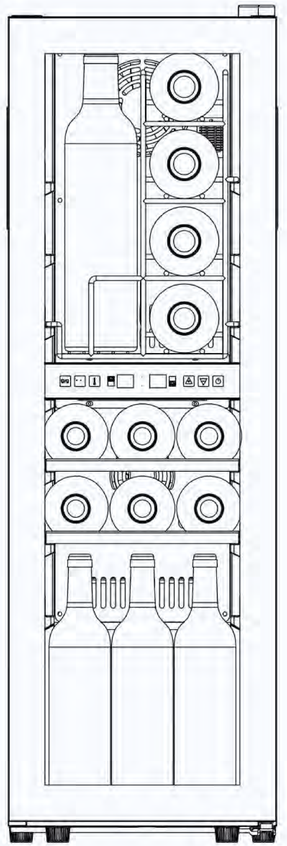

NEW ARRIVAL

## Capacity:

-Storage Capacity(750ml): 18Bottles

-Net Capacity: 45L

-Unit Size: W366xD476xH743mm

-Humidity Range: 50%-80%RH

# **Wine Coolers** | Free Standing | Retro

Red

Wooden-like

White

## ■ Performance

-Temp.Zone: Single Zone
-ERP Class/Noise(dB(A)): G/39
-Temp.Range: 5-20°C

## ■ Packing/Loading

-Packing Size:
W416xD531xH795mm
-20'GP/40'HQ(pcs): 140/348

## ■ Common Features

-Foaming Agent/Refrigerant:
C-Pentane/R600a
-Control Type/Memory:
Touch Control/Yes
-UV-Prool Glass:
Yes ℃/ °F Switch Yes
-Defrost Type: Auto-defrost
-Climate Type: SN,N,ST
-100% CFC/HFC Free

## ■ Features

-Cooling System: Comp/Fan Cooling
-Compressor: Huayi
-Air Ventilation: By Both Side
-Door Frame/Glass:
ABS/Retro/2-Layer Tempered Clear Glass
-Reversible Door: N/A
-Handle Type: Handleless
-Shelf: 3 Beech Shelves
-Display: Blue/White LED Display
-Lighting: White On Top
-Winter Care: N/A
-Cabinet/Plinth Vent Grille Color:
Black/Red/White/N/A
-Certificates: CB/CE/ROHS/REACH

## ■ Extra Options

-Lock&Key: N/A
-Carbon Filter: Option

## ■ Bottle Loading Drawing

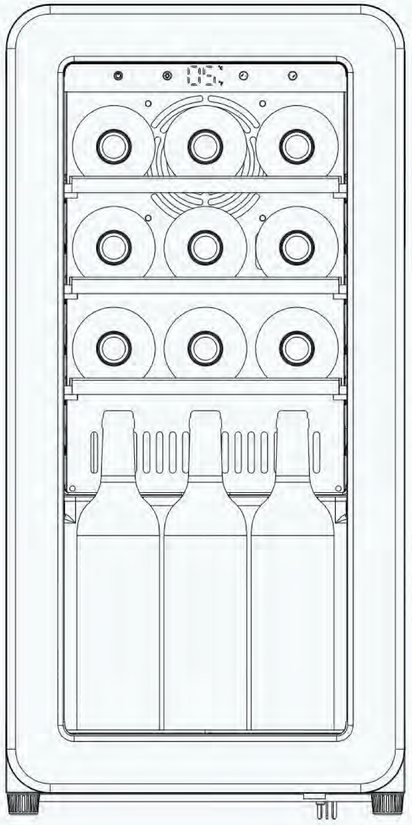

# **Wine Coolers** | Free Standing | Retro

F

37 dB

## Capacity:

-Storage Capacity(750ml): 24Bottles

-Net Capacity: 60L

-Unit Size: W366xD476xH928mm

-Humidity Range: 50%-80%RH

Red

Wooden-like

White

## ■ Performance

-Temp.Zone: Single Zone
-ERP Class/Noise(dB(A)): F/37
-Temp.Range: 5-20℃

## ■ Packing/Loading

-Packing Size:
W416xD531xH980mm
-20'GP/40'HQ(pcs): 104/280

## ■ Common Features

-Foaming Agent/Refrigerant:
C-Pentane/R600a
-Control Type/Memory:
Touch Control/Yes
-UV-Prool Glass:
Yes,℃/ ℉ Switch,Yes
-Defrost Type: Auto-defrost
-Climate Type: SN,N,ST
-100% CFC/HFC Free

## ■ Features

-Cooling System: Comp/Fan Cooling
-Compressor: Huayi
-Air Ventilation: By Both Side
-Door Frame/Glass:
ABS/Hemo/Single Low-E
3-Layer Tempered Clear Glass
-Reversible Door: N/A
-Handle Type: Handleless
-Shelf: 5 Beech Shelves
-Display: Blue/White LED Display
-Lighting: White On Top
-Winter Care: N/A
-Cabinet/Plinth Vent Grille Color:
Black/Red/White/N/A
-Certificates: CB/CE/RoHS/REACH

## ■ Extra Options

-Lock&Key: N/A
-Carbon Filter: Option

## ■ Bottle Loading Drawing

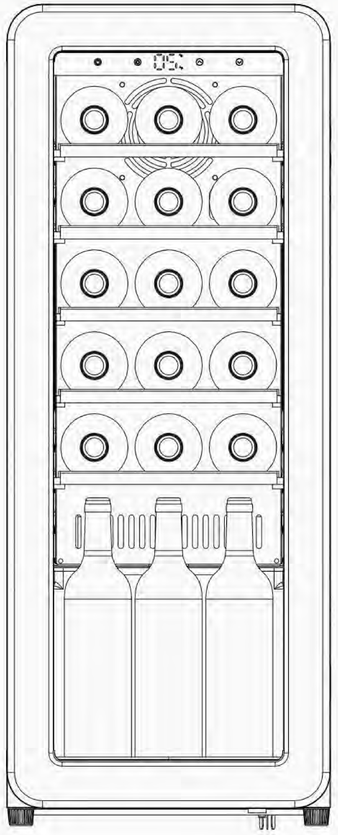

# **Wine Coolers** | Free Standing | Retro

NEW ARRIVAL

## Capacity:

-Storage Capacity(750ml): 33Bottles

-Net Capacity: 90L

-Unit Size: W366xD476xH1205mm

-Humidity Range: 50%-80%RH

Red

White

## Performance

-Temp.Zone: Single Zone
-ERP Class/Noise(dB(A)): G/39
-Temp.Range: 5-20℃

## Packing/Loading

-Packing Size:
W416xD531xH1257mm
-20'GP/40'HQ(pcs): 92/232

## Common Features

-Foaming Agent/Refrigerant:
C-Pentane/R600a
-Control Type/Memory:
Touch Control/Yes
-UV-Prool Glass:
Yes,℃/ ℉ Switch,Yes
-Defrost Type: Auto-defrost
-Climate Type: SN,N,ST
-100% CFC/HFC Free

## Features

-Cooling System: Comp/Fan Cooling
-Compressor: Huayi
-Air Ventilation: By Both Side
-Door Frame/Glass:
ABS/Retro/2-Layer,Tempered Clear Glass
-Reversible Door: N/A
-Handle Type: Handleless
-Shelf: 8 Beech Shelves
-Display: Blue/White LED Display
-Lighting: White On Top
-Winter Care: N/A
-Cabinet/Plinth Vent Grille Color:
Black/Red/White/N/A
-Certificates: CB/CE/RoHS/REACH

## Extra Options

-Lock&Key: N/A
-Carbon Filter: Option

## Bottle Loading Drawing

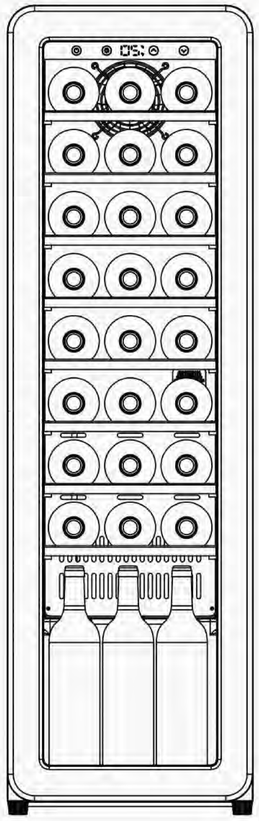

# Wine Coolers | Free Standing | Retro

NEW ARRIVAL

## Capacity:

-Storage Capacity(750ml): 30Bottles

-Net Capacity: 86L

-Unit Size: W366xD476xH1205mm

-Humidity Range: 50%-80%RH

Red

White

## ■ Performance

-Temp.Zone: Duel Zone
-ERP Class/Noise(dB(A)): G/39
-Temp.Range: Upper 5-12℃
Lower 12-20℃

## ■ Packing/Loading

-Packing Size:
W416xD531xH1257mm
-20'GP/40'HQ(pcs): 92/232

## ■ Common Features

-Foaming Agent/Refrigerant:
C-Pentane/R600a
-Control Type/Memory:
Touch Control/Yes
-UV-Prool Glass:
Yes,℃/ ℉ Switch:Yes
-Defrost Type: Auto-defrost
-Climate Type: SN,N,ST
-100% CFC/HFC Free

## ■ Features

-Cooling System: Comp/Fan Cooling
-Compressor: Huayi
-Air Ventilation: By Both Side
-Door Frame/Glass:
ABS/Retro/2-LayerTempered Clear Glass
-Reversible Door: N/A
-Handle Type: Handleless
-Shelf: 8 Beech Shelves
-Display: Blue/White LED Display
-Lighting: White On Top
-Winter Care: N/A
-Cabinet/Plinth Vent Grille Color:
Black/Red/White/N/A
-Certificates: CB/CE/RoHS/REACH

## ■ Extra Options

-Lock&Key: N/A
-Carbon Filter: Option

## ■ Bottle Loading Drawing

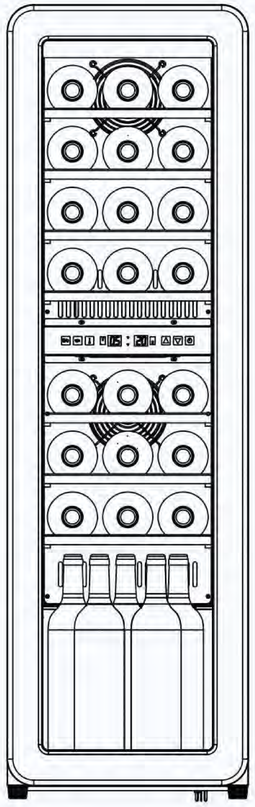

# **Wine Coolers** | Free Standing | Classic

F

37 dB

## Capacity:

-Storage Capacity(750ml): 105Bottles

-Net Capacity: 203L

-Unit Size: W490xD575xH1285mm

-Humidity Range: 50%-80%RH

45 Degree Corner SST Door

Full Glass Door

Wire Shelf

## ■ Performance

-Temp.Zone: Single Zone
-ERP Class/Noise(dB(A)): F/37 G/38
-Temp.Range: 5-20°C

## ■ Packing/Loading

-Packing Size:
W530xD615xH1315mm
-20'GP/40'HQ(pcs): 52/104

## ■ Common Features

-Foaming Agent/Refrigerant:
C-Pentane/R600a
-Control Type/Memory:
Touch Control/Yes
-UV-Prool Glass:
Yes,℃/ ℉ Switch,Yes
-Defrost Type: Auto-defrost
-Climate Type: SN,N,ST
-100% CFC/HFC Free

## ■ Features

-Cooling System: Comp/Fan Cooling
-Compressor: LG
-Air Ventilation: By Plinth Vent Grille
-Door Frame/Glass:
PVC Door Frame
3-Layer Tempered Clear Glass
-Reversible Door: Yes
-Handle Type: Recessed Handle
-Shelf: 10 Beech Shelves/4 Sturdy Beech Shelves
-Display: Blue/White LED Display
-Lighting: White On Top
-Winter Care: Option
-Cabinet/Plinth Vent Grille Color:
Black/Black
-Certificates: CB/CE/ROHS/REACH

## ■ Extra Options

-Lock&Key: Option
-Carbon Filter: Option

## ■ Bottle Loading Drawing

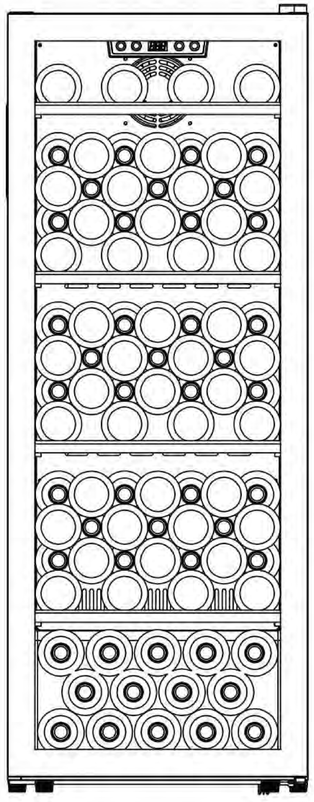

# **Wine Coolers** | Free Standing | Classic

F

36dB

## Capacity:

-Storage Capacity(750ml): 77Bottles

-Net Capacity: 198L

-Unit Size: W490xD575xH1285mm

-Humidity Range: 50%-80%RH

45 Degree Corner SST Door

Full Glass Door

Wire Shelf

## ■ Performance

-Temp.Zone: Duel Zone
-ERP Class/Noise(dB(A)): F/36 C/39
-Temp.Range: Upper 5-12℃
Lower 12-20℃

## ■ Packing/Loading

-Packing Size:
W530xD615xH1315mm
-20'GP/40'HQ(pcs): 52/160

## ■ Common Features

-Foaming Agent/Refrigerant:
C-Pentane/R600a
-Control Type/Memory:
Touch Control/Yes
-UV-Prool Glass:
Yes,℃/ ℉ Switch:Yes
-Defrost Type: Auto-defrost
-Climate Type: SN,N,ST
-100% CFC/HFC Free

## ■ Features

-Cooling System: Comp/Fan Cooling
-Compressor: Inverter/Jiaxipera
-Air Ventilation: By Both Side
-Door Frame/Glass:
PVC Door Frame/2-Layer Tempered Clear Glass
-Reversible Door: Yes
-Handle Type: Recessed Handle
-Shelf: 9 Beech Shelves
-Display: Blue/White LED Display
-Lighting: White On Top
-Winter Care: Yes
-Cabinet/Plinth Vent Grille Color:
Black/N/A
-Certificates: CB/CE/RoHS/REACH

## ■ Extra Options

-Lock&Key: Option
-Carbon Filter: Option

## ■ Bottle Loading Drawing

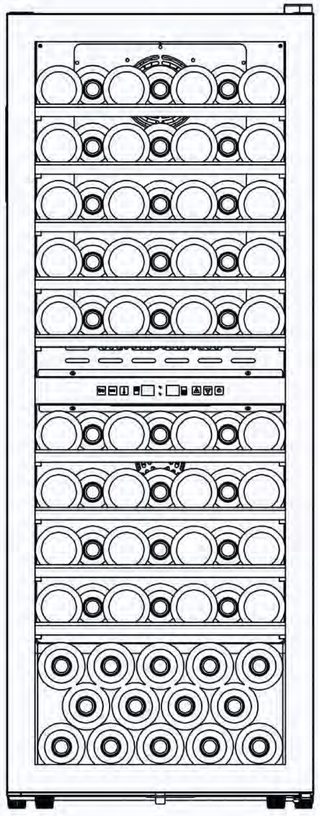

# **Wine Coolers** | Free Standing | Classic

37 dB

## Capacity:

-Storage Capacity(750ml): 105Bottles

-Net Capacity: 248L

-Unit Size: W490xD575xH1546mm

-Humidity Range: 50%-80%RH

45 Degree Corner SST Door

Full Glass Door

## ■ Performance

-Temp.Zone: Single Zone
-ERP Class/Noise(dB(A)): G/37
-Temp.Range: 5-20°C or 2-20°C

## ■ Packing/Loading

-Packing Size:
W580xD615xH1615mm
-20'GP/40'HQ(pcs): 50/108

## ■ Common Features

-Foaming Agent/Refrigerant:
C-Pentane/R600a
-Control Type/Memory:
Touch Control/Yes
-UV-Prool Glass:
Yes ℃/ ℉ Switch,Yes
-Defrost Type: Auto-defrost
-Climate Type: SN,N,ST
-100% CFC/HFC Free

## ■ Features

-Cooling System: Comp/Fan Cooling
-Compressor: Inverter/ Jiaxipera
-Air Ventilation: By Both Side
-Door Frame/Glass:
Full Glass/3-Layer Tempered Clear Glass
-Reversible Door: Yes
-Handle Type: Recessed Handle
-Shelf: 13 Beech Shelves/ 5 Straight Beech Shelves
-Display: Blue/White LED Display
-Lighting: White On Top
-Winter Care: Option
-Cabinet/Plinth Vent Grille Color:
Black/N/A
-Certificates: CB/CE/RoHS/REACH

## ■ Extra Options

-Lock&Key: Option
-Carbon Filter: Option

## ■ Bottle Loading Drawing

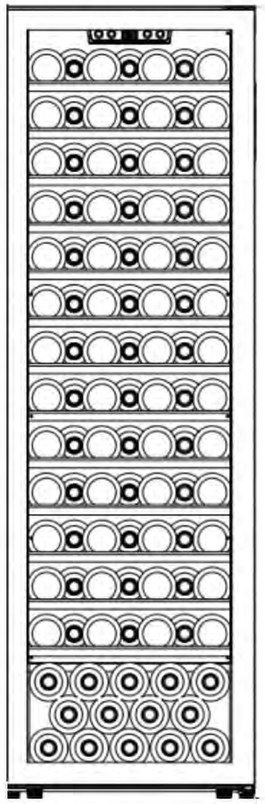

G

37 dB

## Capacity:

-Storage Capacity(750ml): 98Bottles

-Net Capacity: 242L

-Unit Size: W490xD575xH1546mm

-Humidity Range: 50%-80%RH

# **Wine Coolers** | Free Standing | Classic

45 Degree Corner SST Door

Full Glass Door

## ■ Performance

-Temp.Zone: Dual Zone
-ERP Class/Noise(dB(A)): G/37
-Temp.Range:
Upper 5~12℃ Lower 12~22℃
Upper 2~10℃ Lower 10~20℃

## ■ Packing/Loading

-Packing Size:
W580xD615xH1655mm
-20'GP/40'HQ(pcs): 50/100

## ■ Common Features

-Foaming Agent/Refrigerant:
C-Pentane/R600a
-Control Type/Memory:
Touch Control/Yes
-UV-Prool Glass:
Yes,℃/℉ Switch:Yes
-Defrost Type: Auto-defrost
-Climate Type: SN N ST
-100% CFC/HFC Free

## ■ Features

-Cooling System: Comp/Fan Cooling
-Compressor: Inverter Jiaxipera
-Air Ventilation: By Both Side
-Door Frame/Glass:
Full Glass/Single Low-E
3~5mmTempered Clear Glass
-Reversible Door: Yes
-Handle Type: Recessed Handle
-Shelf: 12 Beech Shelves
-Display: Blue/White LED Display
-Lighting: White On Top
-Winter Care: Yes
-Cabinet/Plinth Vent Grille Color:
Black/N/A
-Certificates: CB/CE/RoHS/REACH

## ■ Extra Options

-Lock&Key: Option
-Carbon Filter: Option

## ■ Bottle Loading Drawing

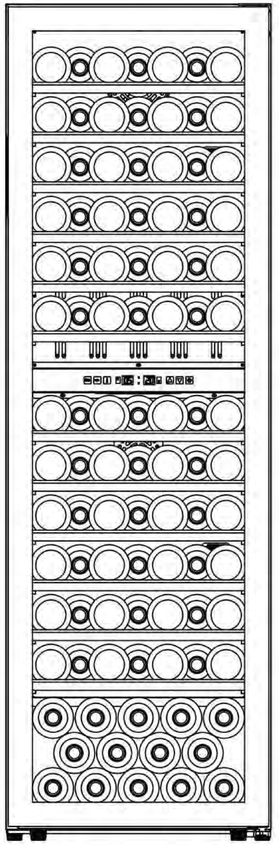

# **Wine Coolers** | Free Standing | Apex

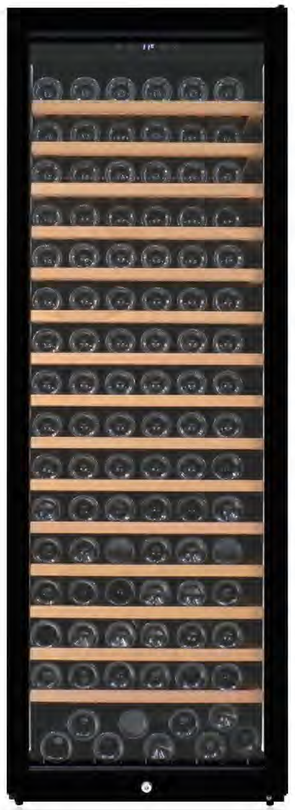

F

39dB

## Capacity:

-Storage Capacity(750ml): 191Bottles

-Net Capacity: 458L

-Unit Size: W598xD701xH1772mm

-Humidity Range: 50%-80%RH

45 Degree Corner SST Door

Slim SST Door

## ■ Performance

-Temp.Zone: Single Zone
-ERP Class/Noise(dB(A)): F/39
-Temp.Range: 5-20°C or 2-20°C

## ■ Packing/Loading

-Packing Size:
W595xD770xH1950mm
-20'GP/40'HQ(pcs): 24/54

## ■ Common Features

-Foaming Agent/Refrigerant:
C-Pentane/R600a
-Control Type/Memory:
Touch Control/Yes
-UV-Prool Glass:
Yes °C/ °F Switch,yes
-Defrost Type: Auto-defrost
-Climate Type: SN,N,ST
-100% CFC/HFC Free

## ■ Features

-Cooling System: Comp/Fan Cooling
-Compressor: Inverter Embraco
-Air Ventilation: By Both Side
-Door Frame/Glass:
Slim SST Door Frame
3-Layer Tempered Clear Glass
-Reversible Door: Yes
-Handle Type: Recessed Handle
-Shelf: 15 Beech Shelves
-Display: Blue/White LED Display
-Lighting: Both Side
-Winter Care: Option
-Cabinet/Plinth Vent Grille Color:
Black/N/A
-Certificates: CB/CE/ROHS/REACH

## ■ Extra Options

-Lock&Key: W/Lock
-Carbon Filter: Option

## ■ Bottle Loading Drawing

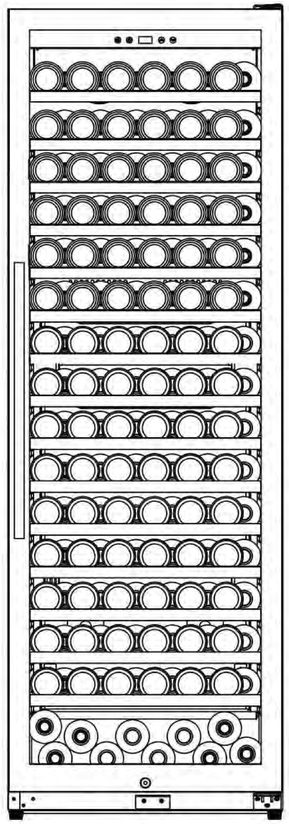

# **Wine Coolers** | Free Standing | Classic

F

38dB

## Capacity:

-Storage Capacity(750ml): 189Bottles

-Net Capacity: 450L

-Unit Size: W598xD701xH1772mm

-Humidity Range: 50%-80%RH

45 Degree Corner SST Door

Seamless SST Door

## ■ Performance

-Temp.Zone: Duel Zone

-ERP Class/Noise(dB(A)): F/38

-Temp.Range:

Upper 5~12℃ Lower 12~20℃

Upper 5~10℃ Lower 10~20℃

## ■ Packing/Loading

-Packing Size:

Wx55xD770xH1450mm

-20'GP/40'HQ(pcs): 24/54

## ■ Common Features

-Foaming Agent/Refrigerant:

C-Pentane/R600a

-Control Type/Memory:

Touch Control/Yes

-UV-Prool Glass:

Yes,℃/ ℉ Switch:Yes

-Defrost Type: Auto-defrost

-Climate Type: SN N ST

-100% CFC/HFC Free

## ■ Features

-Cooling System: Comp/Fan Cooling

-Compressor: Inverter Embraco

-Air Ventilation: By Both Side

-Door Frame/Glass:

Slim SST Door Frame/Single Low-E

3~5mm Tempered Clear Glass

-Reversible Door: Yes

-Handle Type: SST Handle

-Shelf: 4~6 Beech Shelves

-Display: Blue/White LED Display

-Lighting: RGB Lamp On Both Side

-Winter Care: Yes

-Cabinet/Plinth Vent Grille Color:

Black/N/A

-Certificates: CB/CE/RoHS/REACH

## ■ Extra Options

-Lock&Key: W/Lock

-Carbon Filter: Option

## ■ Bottle Loading Drawing

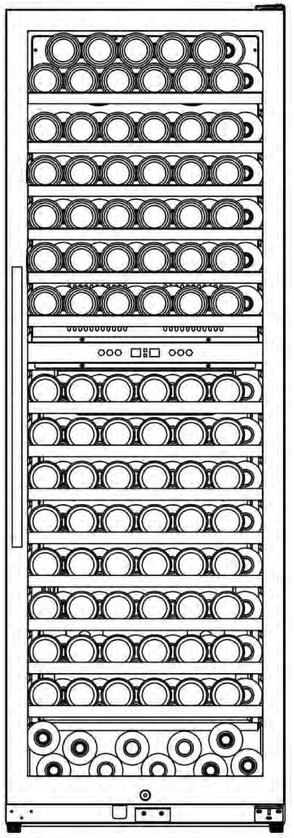

## Capacity:

-Storage Capacity(750ml): 148Bottles

-Net Capacity: 430L

-Unit Size: W600xD598xH2123mm

-Humidity Range: 50%-80%RH

# **Wine Coolers** | Free Standing/Build-in | Classic

Seamless SST Door-Black

Seamless SST Door-Silver

Seamless SST Door-Gold

## ■ Performance

-Temp.Zone: Dual Zone
-ERP Class/Noise(dB(A)): D0E
-Temp.Range: Upper 5-12℃
Lower 12-20℃

## ■ Packing/Loading

-Packing Size:
W655xD665xH2290mm
-20'GP/40'HQ(pcs): 24/54

## ■ Common Features

-Foaming Agent/Refrigerant:
C-Pentane/R600a
-Control Type/Memory:
Touch Control/Yes
-UV-Prool Glass:
Yes,℃/ °F Switch:Yes
-Defrost Type: Auto-defrost
-Climate Type: SN,N,ST
-100% CFC/HFC Free

## ■ Features

-Cooling System: Comp/Fan Cooling
-Compressor: Inverter Embraco
-Air Ventilation: By Both Side
-Door Frame/Glass:
Seamless SST/Black/Double Low-E
2-Layer Tempered Clear Glass
-Reversible Door: N/A
-Handle Type: SST Handle/Black
-Shelf: 17 Wire Sheves W
Beech Trim&2-fold Rails
-Display: Blue/White LED Display
-Lighting: Three Sides
-Winter Care: Yes
-Cabinet/Plinth Vent Grille Color:
Black/Black
-Certificates: CB/CE/ETL/RoHS/REACH

## ■ Extra Options

-Lock&Key: N/A
-Carbon Filter: Option

## ■ Bottle Loading Drawing

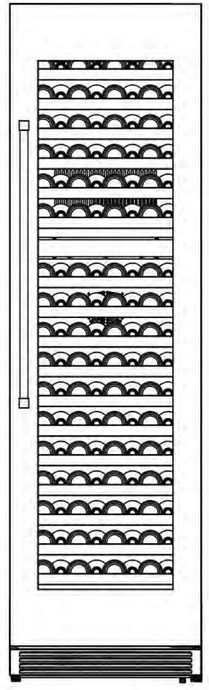

## ■ Installation Drawing:Free Standing/Built-in

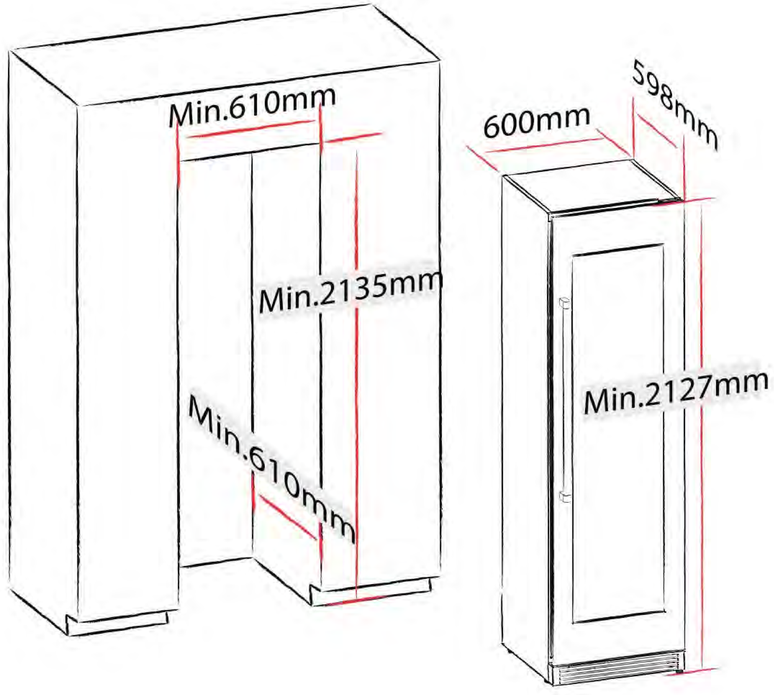

# **Wine Coolers** | Free Standing/Build-in | Classic

38dB

## Capacity:

-Storage Capacity(750ml): 191Bottles

-Net Capacity: 458L

-Unit Size: W598xD680xH1818mm

-Humidity Range: 50%-80%RH

45 Degree Corner SST Door

Full Glass Door

## ■ Performance

-Temp.Zone: Single Zone
-ERP Class/Noise(dB(A)): G/36
-Temp.Range: 5-20°C or 2-20°C

## ■ Packing/Loading

-Packing Size:
W595xD750xH1980mm
-20'GP/40'HQ(pcs): 24/54

## ■ Common Features

-Foaming Agent/Refrigerant:
C-Pentane/R600a
-Control Type/Memory:
Touch Control/Yes
-UV-Prool Glass:
Yes,℃/ ℉ Swirch,Yes
-Defrost Type: Auto-defrost
-Climate Type: SN,N,ST
-100% CFC/HFC Free

## ■ Features

-Cooling System: Comp/Fan Cooling
-Compressor: Inverter Embraco
-Air Ventilation: By Plinth Vent Grille
-Door Frame/Glass:
Full Glass/3-Layer Tempered Clear Glass
-Reversible Door: Yes
-Handle Type: Recessed Handle
-Shelf: 15 Beech Shelves
-Display: Blue/White LED Display
-Lighting: Both Sides
-Winter Care: Option
-Cabinet/Plinth Vent Grille Color:
Black/Black
-Certificates: CB/CE/ETL/RoHS/REACH

## ■ Extra Options

-Lock&Key: W/Lock
-Carbon Filter: Option

## ■ Bottle Loading Drawing

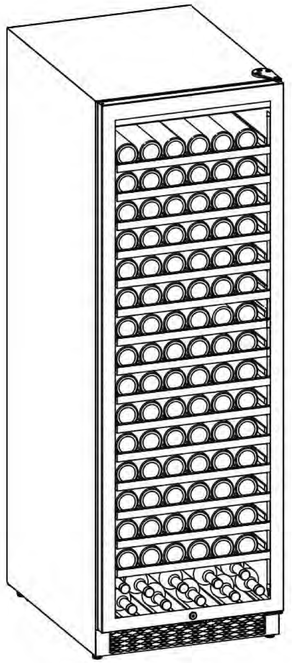

## ■ Installation Drawing:Free Standing/Build-in

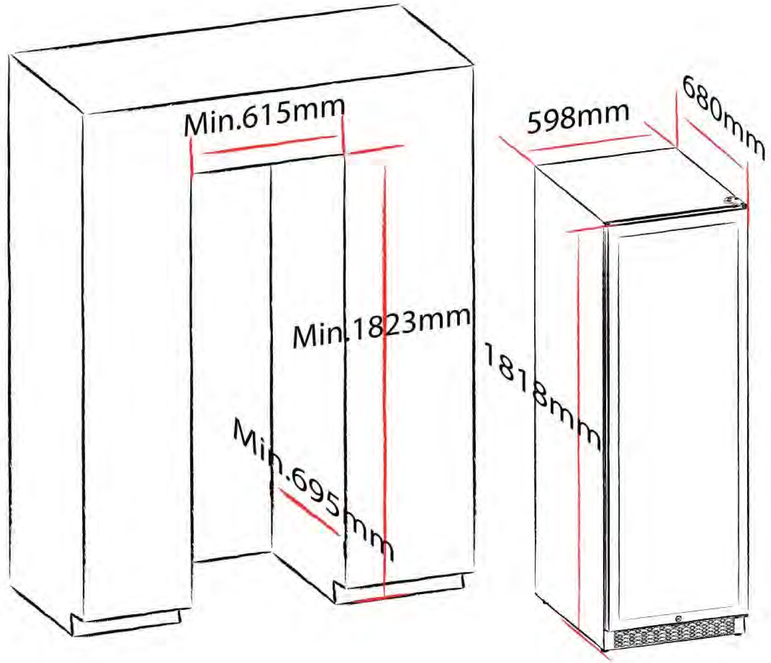

38dB

## Capacity:

-Storage Capacity(750ml): 189Bottles

-Net Capacity: 450L

-Unit Size: W598xD680xH1818mm

-Humidity Range: 50%-80%RH

45 Degree Corner SST Door

Full Glass Door

## ■ Performance

-Temp.Zone: Duel Zone
-ERP Class/Noise(dB(A)): G/38
-Temp.Range:
Upper 5-12℃ Lower 12-20℃
Upper 2-10℃ Lower 10-20℃

## ■ Packing/Loading

-Packing Size:
W595xD750xH1980mm
-20'GP/40'HQ(pcs): 24/54

## ■ Common Features

-Foaming Agent/Refrigerant:
C-Pentane/R600a
-Control Type/Memory:
Touch Control/Yes
-UV-Prool Glass:
Yes,℃/ ℉ Switch:Yes
-Defrost Type: Auto-defrost
-Climate Type: SN,N,ST
-100% CFC/HFC Free

## ■ Features

-Cooling System: Comp/Fan Cooling
-Compressor: Inverter/Embraco
-Air Ventilation: By Plinth Vent Grille
-Door Frame/Glass:
Full Glass/Single Low-E
3-Layer Tempered Clear Glass
-Reversible Door: Yes
-Handle Type: Recessed Handle
-Shelf: 4 Beech Shelves
-Display: Blue/White LED Display
-Lighting: Three Sides
-Winter Care: Yes
-Cabinet/Plinth Vent Grille Color:
Black/Black
-Certificates: CB/CE/ETL/RoHS/REACH

## ■ Extra Options

-Lock&Key: W/Lock
-Carbon Filter: Option

## ■ Bottle Loading Drawing

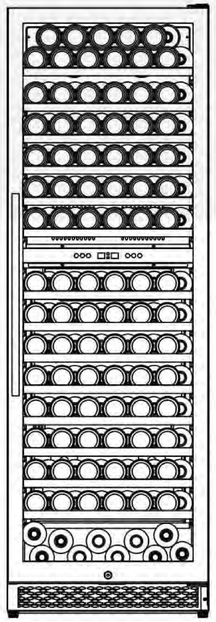

## ■ Installation Drawing:Free Standing/Built-in

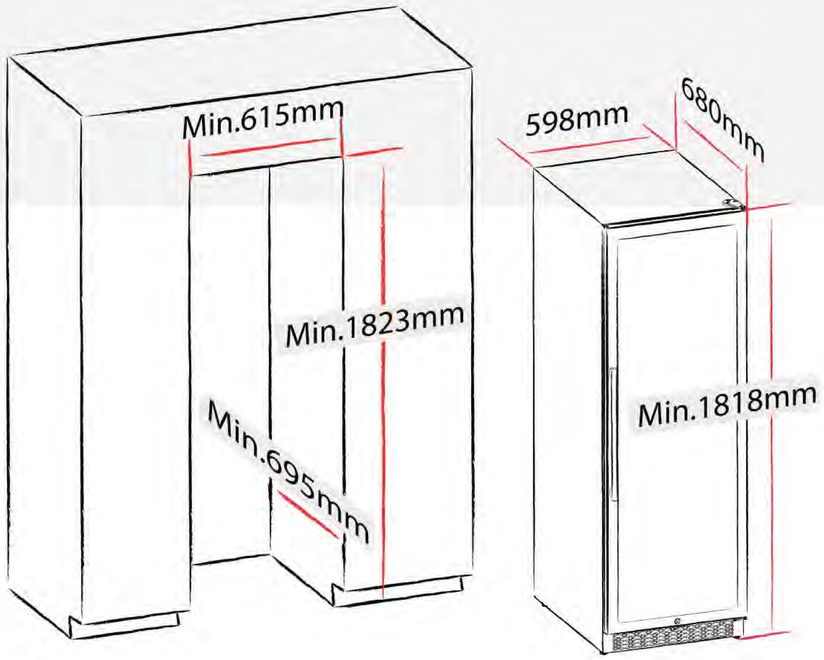

# **Wine Coolers** | Desk | Static Cooling | Classic

## Capacity:

-Storage Capacity(750ml): 14Bottles

-Net Capacity: 42L

-Unit Size: W480xD430xH505mm

-Humidity Range: 50%-80%RH

45 Degree Corner SST Door

Full Glass Door

## ■ Performance

-Temp.Zone: Single Zone
-ERP Class/Noise(dB(A)): G/41
-Temp.Range: 5-20℃

## ■ Packing/Loading

-Packing Size:
W510xD460xH532mm
-20'GP/40'HQ(pcs): 220/560

## ■ Common Features

-Foaming Agent/Refrigerant:
C-Pentane/R600a
-Control Type/Memory:
Touch Control/Yes
-UV-Proof Glass:
Yes,℃/ ℉ Switch,Yes
-Defrost Type: Auto-defrost
-Climate Type: SN,N,ST
-100% CFC/HFC Free

## ■ Features

-Cooling System: Comp/Static Cooling
-Compressor: Huayi
-Air Ventilation: By Both Side
-Door Frame/Glass:
Full Glass/2-Layer Tempered Clear Glass
-Reversible Door: Yes
-Handle Type: Recessed Handle
-Shelf: 2 Wire Shelves
-Lighting: White On Top
-Winter Care: N/A
-Cabinet/Plinth Vent Grille Color:
Black/N/A
-Certificates: CB/CE/ROHS/REACH

## ■ Extra Options

-Lock&Key: Option
-Carbon Filter: N/A

## ■ Bottle Loading Drawing

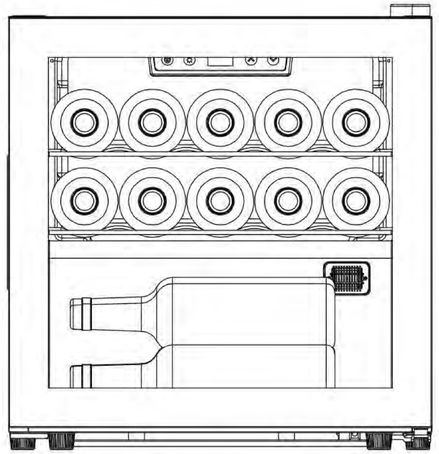

## ■ Installation Drawing:Free Standing/Build-in

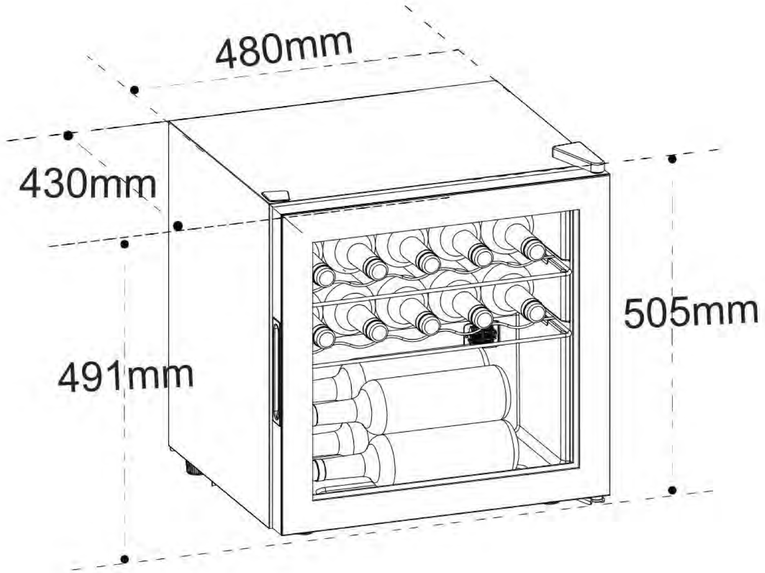

# **Wine Coolers** | Static Cooling | Classic

## Capacity:

-Storage Capacity(750ml): 33Bottles

-Net Capacity: 90L

-Unit Size: W480xD430xH860mm

-Humidity Range: 50%-80%RH

45 Degree Corner SST Door

Full Glass Door

Wire Shelf

## ■ Performance

-Temp.Zone: Single Zone
-ERP Class/Noise(dB(A)): G/41
-Temp.Range: 5-20°C

## ■ Packing/Loading

-Packing Size:
W510xD460xH885mm
-20'GP/40'HQ(pcs): 120/330

## ■ Common Features

-Foaming Agent/Refrigerant:
C-Pentane/R600a
-Control Type/Memory:
Touch Control/Yes
-UV-Prool Glass:
Yes,℃/℉ Swirch,Yes
-Defrost Type: Auto-defrost
-Climate Type: SN,N,ST
-100% CFC/HFC Free

## ■ Features

-Cooling System: Comp/Static Cooling
-Compressor: Huayi
-Air Ventilation: By Both Side
-Door Frame/Glass:
PVC Door Frame
2-Layer Tempered Clear Glass
-Reversible Door: Yes
-Handle Type: Recessed Handle
-Shelf: 5 Beech Shelves
-Lighting: White On Top
-Winter Care: N/A
-Cabinet/Plinth Vent Grille Color:
Black/N/A
-Certificates: CB/CE/RoHS/REACH

## ■ Extra Options

-Lock&Key: Option
-Carbon Filter: N/A

## ■ Bottle Loading Drawing

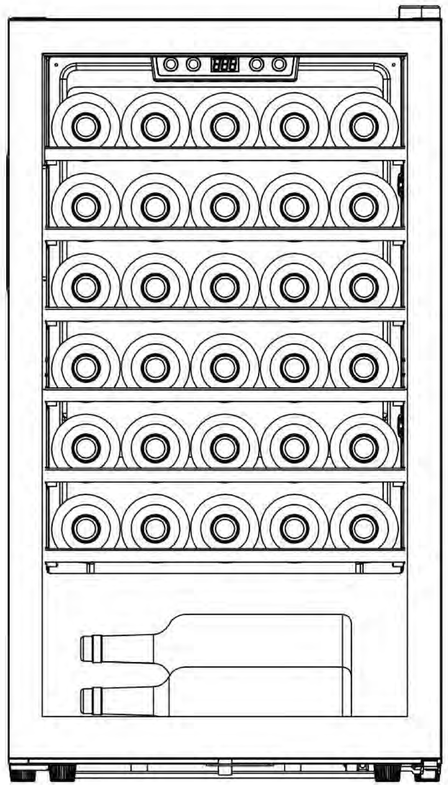

# **Wine Coolers** | Static Cooling | Classic

## Capacity:

-Storage Capacity(750ml): 28Bottles

-Net Capacity: 90L

-Unit Size: W480xD430xH860mm

-Humidity Range: 50%-80%RH

45 Degree Corner SST Door

Full Glass Door

## ■ Performance

-Temp.Zone: Dual Zone
-ERP Class/Noise(dB(A)): G/39
-Temp.Range: Upper 5-12℃
Lower 12-20℃

## ■ Packing/Loading

-Packing Size:
W510xD460xH885mm
-20'GP/40'HQ(pcs): 120/330

## ■ Common Features

-Foaming Agent/Refrigerant:
C-Pentane/R600a
-Control Type/Memory:
Touch Control/Yes
-UV-Prool Glass:
Yes,℃/ ℉ Switch,Yes
-Defrost Type: Auto-defrost
-Climate Type: SN,N,ST
-100% CFC/HFC Free

## ■ Features

-Cooling System: Comp/Static Cooling
-Compressor: Huayi
-Air Ventilation: By Both Side
-Door Frame/Glass:
PVC Door Frame
3-Layer,Tempered Clear Glass
-Reversible Door: Yes
-Handle Type: Recessed Handle
-Shelf: 5 Beech Shelves
-Lighting: White On Top
-Winter Care: N/A
-Cabinet/Plinth Vent Grille Color:
Black/N/A
-Certificates: CB/CE/RoHS/REACH

## ■ Extra Options

-Lock&Key: Option
-Carbon Filter: N/A

## ■ Bottle Loading Drawing

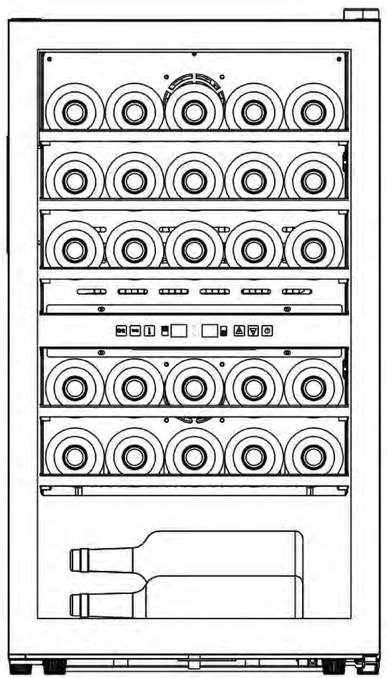

# **Beverage Coolers** | Build-under | Classic

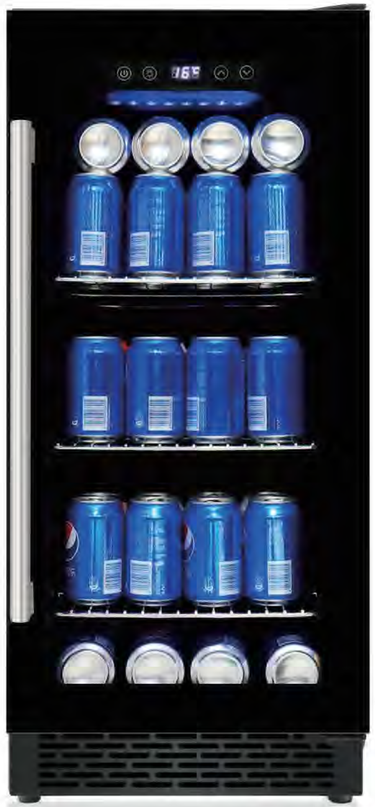

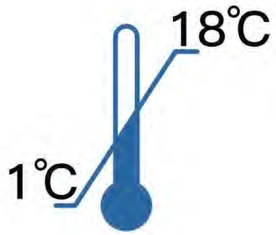


## Capacity:

-Storage Capacity(330ml/11.2oz): 90Cans

-Net Capacity: 90L

-Unit Size: W380xD585xH870mm

-Humidity Range: 50%-80%RH

45 Degree Corner SST Door

Parallel SST Panel Door

CHrome Shelf

## ■ Performance

-Temp.Zone: Single Zone
-ERP Class/Noise(dB(A)): D/E/39
-Temp.Range: 1-18℃

## ■ Packing/Loading

-Packing Size:
W420xD532xH810mm
-20'GP/40'HQ(pcs): 123/297

## ■ Common Features

-Foaming Agent/Refrigerant:
C-Pentane/R600a
-Control Type/Memory:
Touch Control/Yes
-UV-Prool Glass:
Yes ℃/ ℉ Switch,Yes
-Defrost Type: Auto-defrost
-Climate Type: SN,N,ST
-100% CFC/HFC Free

## ■ Features

-Cooling System: Comp/Static Cooling
-Compressor: Haxipera
-Air Ventilation: By Plinth Vebt Grille
-Door Frame/Glass:
Full Glass/2-Layer Tempered Clear Glass
-Reversible Door: Yes
-Handle Type: SST
-Shelf: 3 Wire Shelves
-Lighting: White On Top
-Winter Care: N/A
-Cabinet/Plinth Vent Grille Color:
Black/Black
-Certificates: CB/CE/ETL/RoHS/REACH

## ■ Extra Options

-Lock&Key: Option
-Carbon Filter: Option

## ■ Bottle Loading Drawing

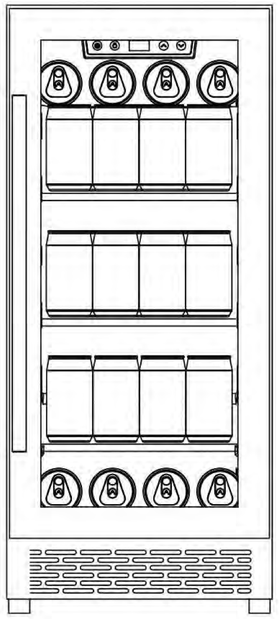

## ■ Installation Drawing:Build-under

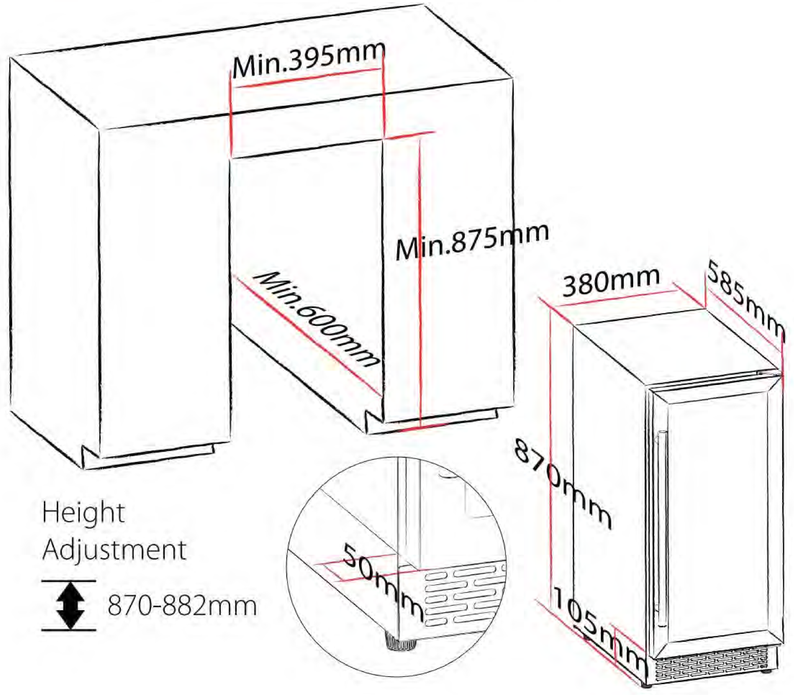

# **Beverage Coolers** | Build-under | Classic

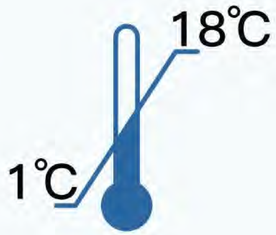


## Capacity:

-Storage Capacity(330ml/11.2oz): 151Cans

-Net Capacity: 148L

-Unit Size: W598xD585xH870mm

-Humidity Range: 50%-80%RH

45 Degree Corner SST Door

Full Glass Door

Mirror Glass Door

## ■ Performance

-Temp.Zone: Single Zone
-ERP Class/Noise(dB(A)): D0E/39
-Temp.Range: 1-18℃

## ■ Packing/Loading

-Packing Size:
W650xD645xH910mm
-20'GP/40'HQ(pcs): 54/152

## ■ Common Features

-Foaming Agent/Refrigerant:
C-Pentane/R600a
-Control Type/Memory:
Touch Control/Yes
-UV-Prool Glass:
Yes,℃/℉ Switch,Yes
-Defrost Type: Auto-defrost
-Climate Type: SN,N,ST
-100% CFC/HFC Free

## ■ Features

-Cooling System: Comp/Static Cooling
-Compressor: Jiaxipera
-Air Ventilation: By Plinth Vent Grille
-Door Frame/Glass:
Full Glass/2-Layer Tempered Mirror Glass
-Reversible Door: Yes
-Handle Type: SST
-Shelf: 3 Wire Shelves
-Lighting: White On Top
-Winter Care: N/A
-Cabinet/Plinth Vent Grille Color:
Black/Black
-Certificates: CB/CE/ETL/RoHS/REACH

## ■ Extra Options

-Lock&Key: Option
-Carbon Filter: Option

## ■ Bottle Loading Drawing

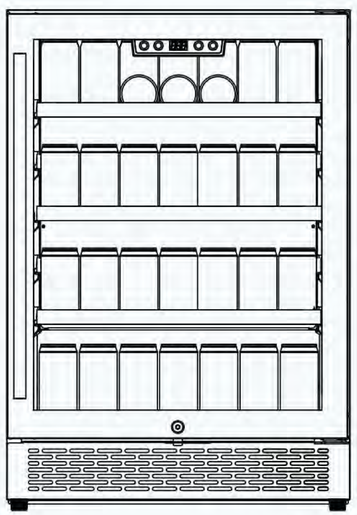

## ■ Installation Drawing:Build-under

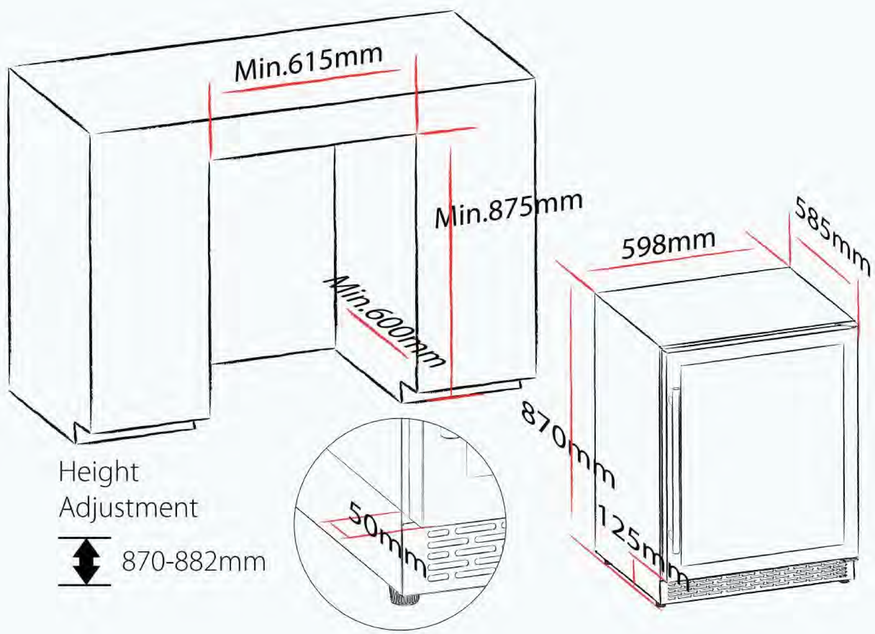

# **Beverage Coolers** | Build-under | Classic

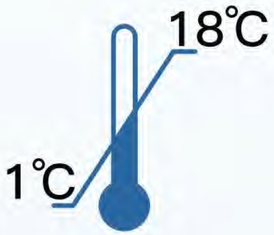


## Capacity:

-Storage Capacity(330ml/11.2oz): 133Cans

-Net Capacity: 139L

-Unit Size: W598xD585xH870mm

-Humidity Range: 50%-80%RH

45 Degree Corner SST Door

Full Glass Door

Mirror Glass Door

## ■ Performance

-Temp.Zone: Dual Zone
-ERP Class/Noise(dB(A)): D/E/39
-Temp.Range: Upper 1-18℃
Lower 1-18℃

## ■ Packing/Loading

-Packing Size:
W650xD645xH910mm
-20'GP/40'HQ(pcs): 54/152

## ■ Common Features

-Foaming Agent/Refrigerant:
C-Pentane/R600a
-Control Type/Memory:
Touch Control/Yes
-UV-Prool Glass:
Yes,℃/ ℉ Switch,Yes
-Defrost Type: Auto-defrost
-Climate Type: SN,N,ST
-100% CFC/HFC Free

## ■ Features

-Cooling System: Comp/Static Cooling
-Compressor: Jiaxipera
-Air Ventilation: By Plinth Vent Grille
-Door Frame/Glass:
Full Glass/2-Layer,Tempered Mirror Glass
-Reversible Door: Yes
-Handle Type: SST
-Shelf: 3 Wire Shelves
-Lighting: White On Top
-Winter Care: Yes
-Cabinet/Plinth Vent Grille Color:
Black/Black
-Certificates: ETL

## ■ Extra Options

-Lock&Key: Option
-Carbon Filter: Option

## ■ Bottle Loading Drawing

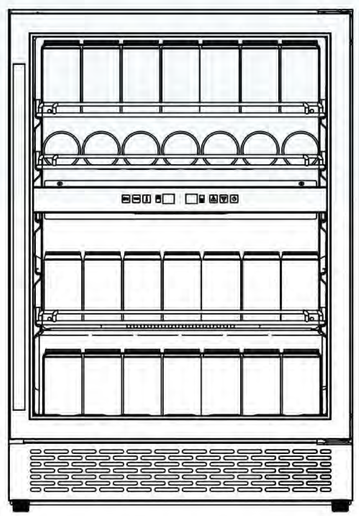

## ■ Installation Drawing:Build-under

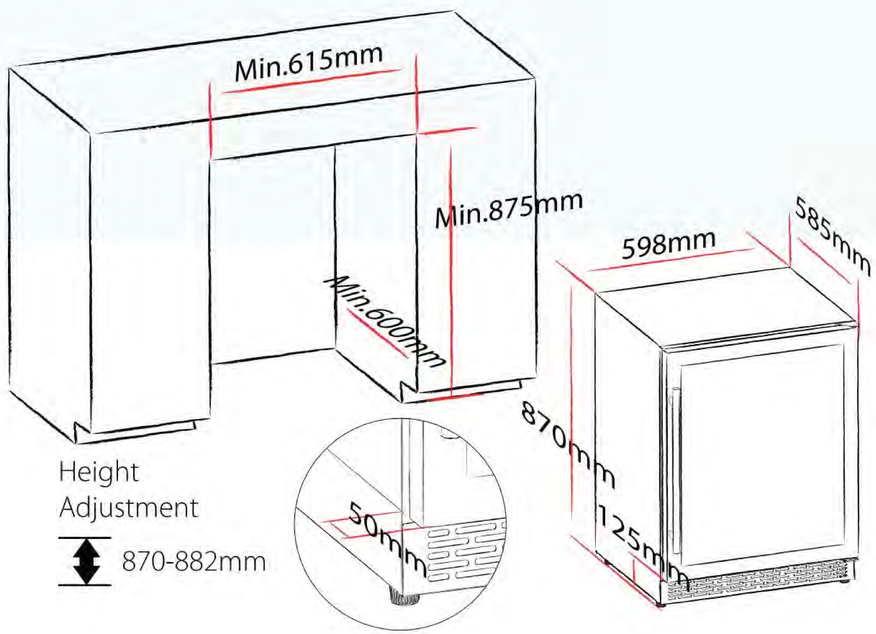

# **Beer Coolers** | Build-under | Arctic

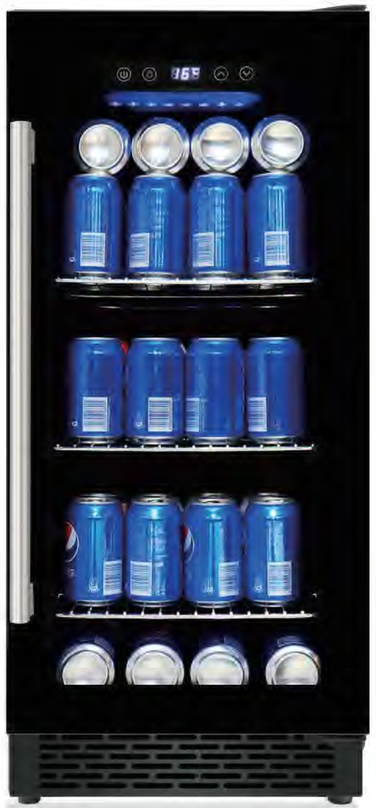

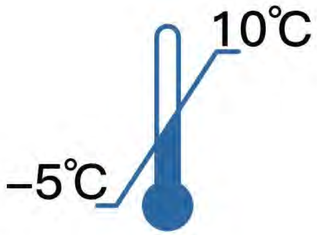


## Capacity:

-Storage Capacity(330ml/11.2oz): 90Cans

-Net Capacity: 90L

-Unit Size: W380xD585xH870mm

-Humidity Range: 50%-80%RH

45 Degree Corner SST Door

Parallel SST Panel Door

Chrome Shelf

## ■ Performance

-Temp.Zone: Single Zone
-ERP Class/Noise(dB(A)): /39
-Temp.Range: -5-10℃

## ■ Packing/Loading

-Packing Size:
W420xD632xH910mm
-20'GP/40'HQ(pcs): 123/292

## ■ Common Features

-Foaming Agent/Refrigerant:
C-Pentane/R600a
-Control Type/Memory:
Touch Control/Yes
-UV-Prool Glass:
Yes,℃/ ℉ Switch,Yes
-Defrost Type: Auto-defrost
-Climate Type: SN,N,ST
-100% CFC/HFC Free

## ■ Features

-Cooling System: Comp/Static Cooling
-Compressor: Haxipera
-Air Ventilation: By Plinth Vent Grille
-Door Frame/Glass:
Full Glass/2-Layer Tempered Clear Glass
-Reversible Door: Yes
-Handle Type: SST
-Shelf: 3 Wire Shelves
-Lighting: White On Top
-Winter Care: N/A
-Cabinet/Plinth Vent Grille Color:
Black/Black
-Certificates: CB/CE/ETL/RoHS/REACH

## ■ Extra Options

-Lock&Key: Option
-Carbon Filter: Option

## ■ Bottle Loading Drawing

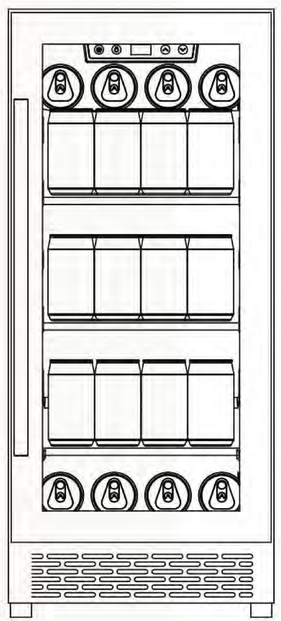

## ■ Installation Drawing:Build-under

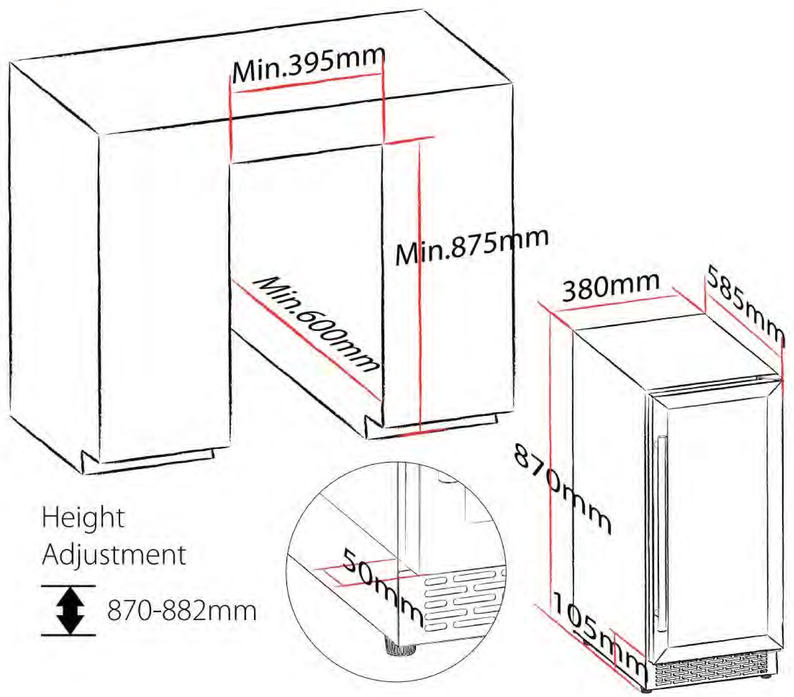

# **Beer Coolers** | Build-under | Classic

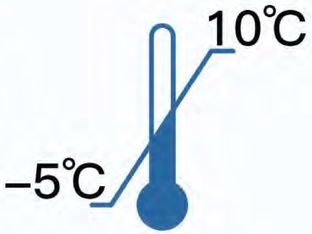


## Capacity:

-Storage Capacity(330ml/11.2oz): 151Cans

-Net Capacity: 148L

-Unit Size: W598xD585xH870mm

-Humidity Range: 50%-80%RH

45 Degree Corner SST Door

Full Glass Door

Mirror Glass Door

## ■ Performance

-Temp.Zone: Single Zone
-ERP Class/Noise(dB(A)): /39
-Temp.Range: -5-10℃

## ■ Packing/Loading

-Packing Size:
W650xD645xH810mm
-20'GP/40'HQ(pcs): 54/152

## ■ Common Features

-Foaming Agent/Refrigerant:
C-Pentane/R600a
-Control Type/Memory:
Touch Control/Yes
-UV-Prool Glass:
Yes,℃/ ℉ Switch,Yes
-Defrost Type: Auto-defrost
-Climate Type: SN,N,ST
-100% CFC/HFC Free

## ■ Features

-Cooling System: Comp/Static Cooling
-Compressor: Jiaxipera
-Air Ventilation: By Plinth Vent Grille
-Door Frame/Glass:
Full Glass/ Double Low-E
3-Layer Tempered Clear Glass
-Reversible Door: Yes
-Handle Type: SST
-Shelf: 3 Wire Shelves
-Lighting: White On Top
-Cabinet/Plinth Vent Grille Color:
Black/Black
-Certificates: CB/CE/ETL/RoHS/REACH

## ■ Extra Options

-Lock&Key: Option
-Carbon Filter: Option

## ■ Bottle Loading Drawing

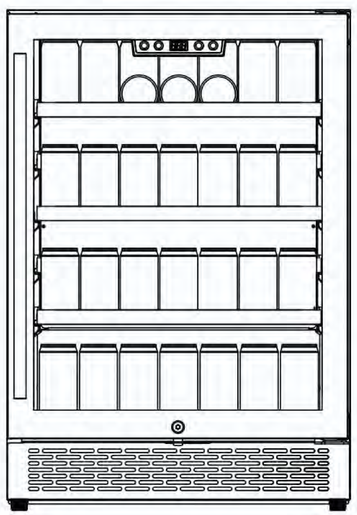

## ■ Installation Drawing:Build-under

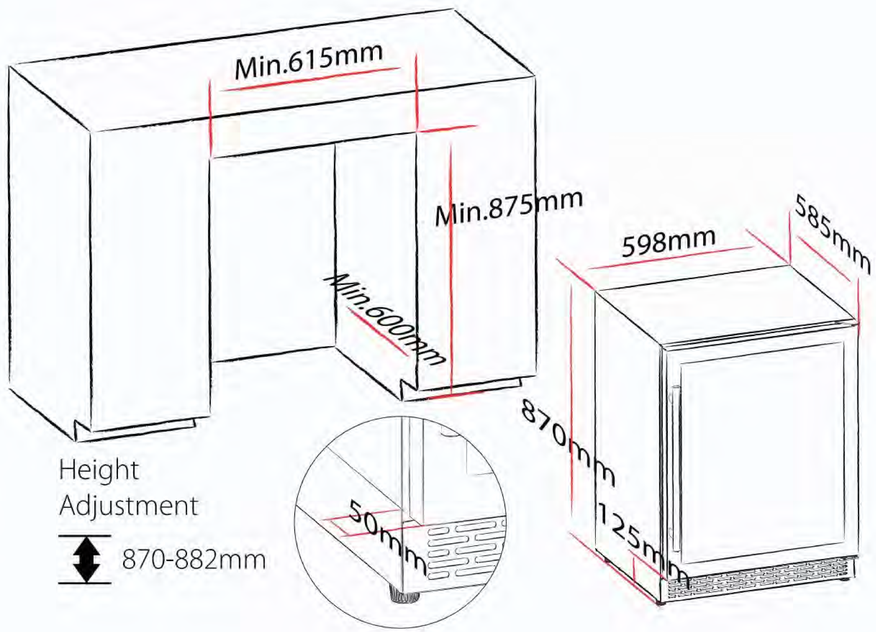

# **Beer Coolers** | Build-under | Classic

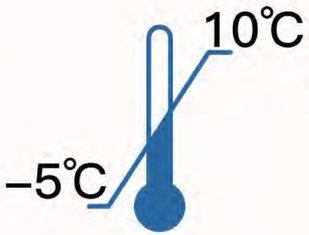


## Capacity:

-Storage Capacity(750ml+330ml):

20Bottles+57Cans

-Net Capacity: 118L

-Unit Size: W598xD585xH868mm

-Humidity Range: 50%-80%RH

45 Degree Corner SST Door

## ■ Performance

-Temp.Zone: Dual Zone
-ERP Class/Noise(dB(A)): /39
-Temp.Range: Left 5-20℃
Right -5-10℃

## ■ Packing/Loading

-Packing Size:
W650xD645xH910mm
-20'GP/40'HQ(pcs): 54/152

## ■ Common Features

-Foaming Agent/Refrigerant:
C-Pentane/R600a
-Control Type/Memory:
Touch Control/Yes
-UV-Prool Glass:
Yes,℃/℉ Switch,Yes
-Defrost Type: Auto-defrost
-Climate Type: SN,N,ST
-100% CFC/HFC Free

## ■ Features

-Cooling System: Comp/Fan Cooling
-Compressor: Jiaxipera
-Air Ventilation: By Plinth Vent Grille
-Door Frame/Glass:
Full Glass/Double Low-E
3-Layer,Tempered Clear Glass
-Reversible Door: N/A
-Handle Type: SST
-Shelf: Right 3 Wire Shelves
Left 5 Beech Shelves
-Lighting: White On Top
-Winter Care: Yes
-Cabinet/Plinth Vent Grille Color:
Black/Black
-Certificates: CB/CE/ETL/RoHS/REACH

## ■ Extra Options

-Lock&Key: Option
-Carbon Filter: Option

## ■ Bottle Loading Drawing

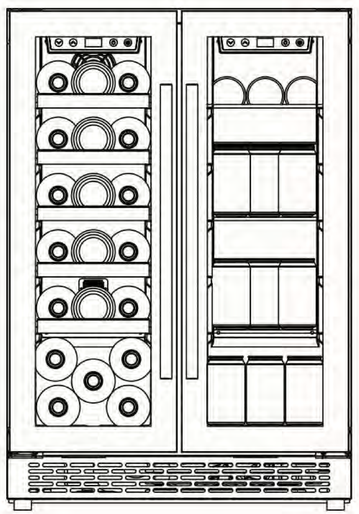

## ■ Installation Drawing:Build-under

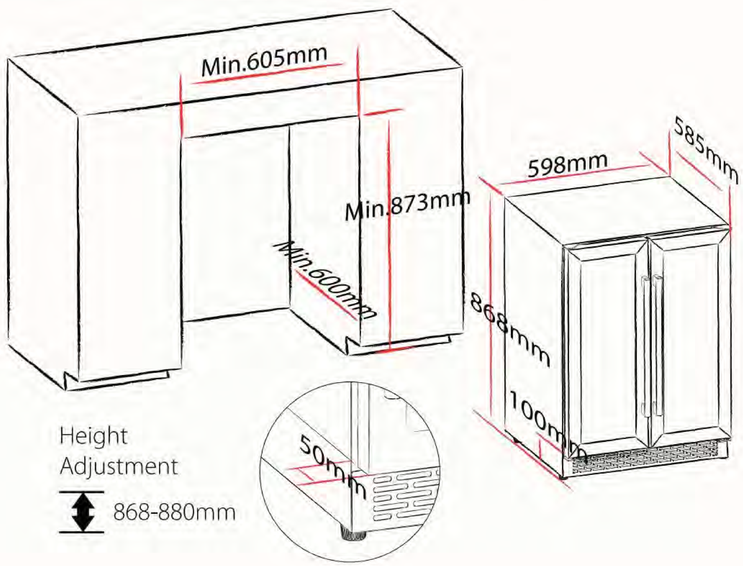

# **Beverage Coolers** | Build-under | Classic

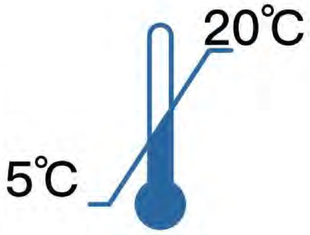


## Capacity:

-Storage Capacity(750ml+330ml):

33Bottles+90Cans

-Net Capacity: 180L

-Unit Size: W760xD585xH870mm

-Humidity Range: 50%-80%RH

45 Degree Corner SST Door

Full Glass Door

## ■ Performance

-Temp.Zone: Dual Zone
-ERP Class/Noise(dB(A)): D0F/39
-Temp.Range: Left 5-20℃
Right 5-20℃

## ■ Packing/Loading

-Packing Size:
W810xD645xH920mm
-20'GP/40'HQ(pcs): 50/113

## ■ Common Features

-Foaming Agent/Refrigerant:
C-Pentane/R600a
-Control Type/Memory:
Touch Control/Yes
-UV-Prool Glass:
Yes,℃/℉ Switch,Yes
-Defrost Type: Auto-defrost
-Climate Type: SN,N,ST
-100% CFC/HFC Free

## ■ Features

-Cooling System: Comp/Fan Cooling
-Compressor: Jiaxipera
-Air Ventilation: By Plinth Vent Grille
-Door Frame/Glass:
Full Glass/2-Layer Tempered Clear Glass
-Reversible Door: N/A
-Handle Type: SST
-Shelf: Left 3 Wire Shelves
Right 6 Beech Shelves
-Lighting: White On Top
-Winter Care: Yes
-Cabinet/Plinth Vent Grille Color:
Black/Black
-Certificates: CB/CE/ETL/RoHS/REACH

## ■ Extra Options

-Lock&Key: Option
-Carbon Filter: Option

## ■ Bottle Loading Drawing

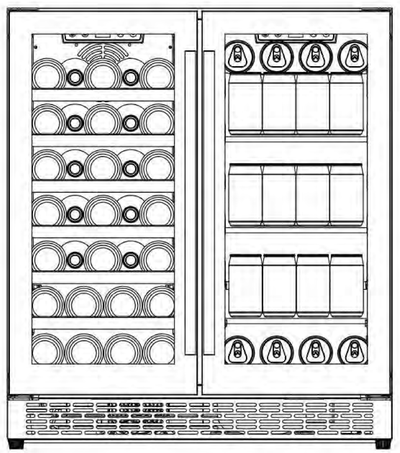

## ■ Installation Drawing:Build-under

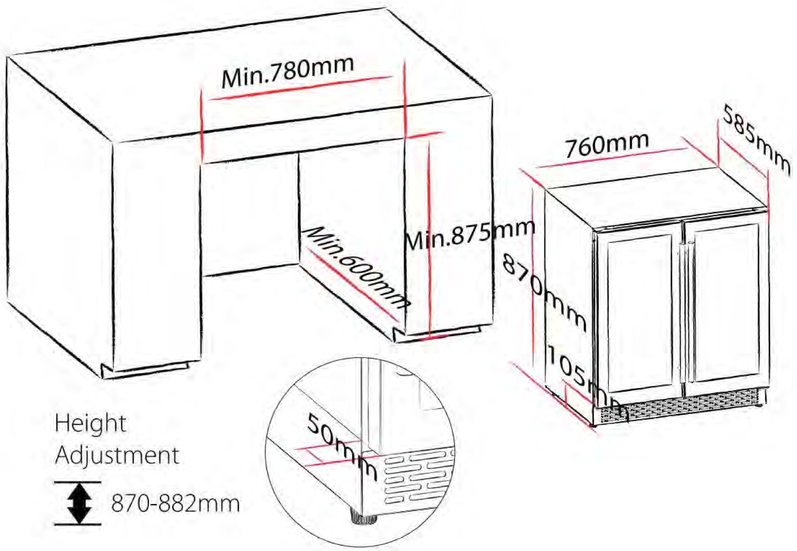

# Beverage Coolers | Free Standing | Apex

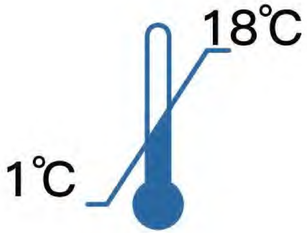


## Capacity:

-Storage Capacity(330ml/11.02oz): 60Cans

-Net Capacity: 45L

-Unit Size: W343xD475xH721mm

-Humidity Range: 50%-80%RH

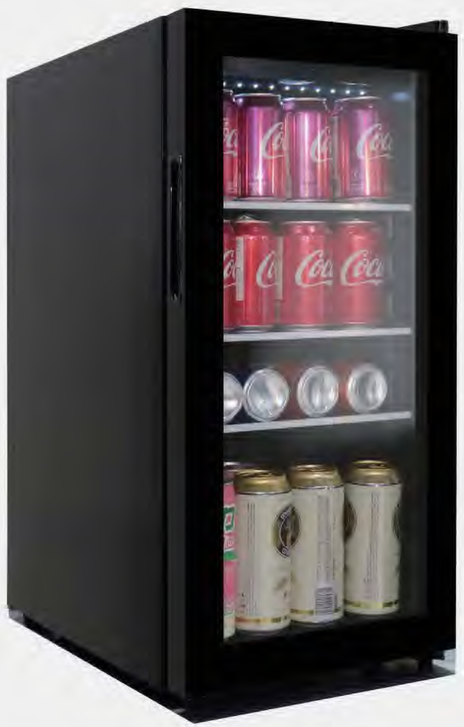

Full Glass Door

## ■ Performance

-Temp.Zone: Single Zone
-ERP Class/Noise(dB(A)): G/39
-Temp.Range: 1~18℃

## ■ Packing/Loading

-Packing Size:
W379xD575xH748mm
-20'GP/40'HQ(pcs): 190/461

## ■ Common Features

-Foaming Agent/Refrigerant:
C-Pentane/R600a
-Control Type/Memory:
Touch Control/Yes
-UV-Prool Glass:
Yes,℃/ ℉ Switch,Yes
-Defrost Type: Auto-defrost
-Climate Type: SN,N,ST
-100% CFC/HFC Free

## ■ Features

-Cooling System: Comp/Fan Cooling
-Compressor: Huayi
-Air Ventilation: By Both Side
-Door Frame/Glass:
Full Glass/2-Layer Tempered Clear Glass
-Reversible Door: Yes
-Handle Type: Recessed Handle
-Shelf: 3 Tempered Glass Shelves
-Display: Blue/White LED Display
-Lighting: White On Top
-Winter Care: N/A
-Cabinet/Plinth Vent Grille Color:
Black/N/A
-Certificates: CB/CE/RoHS/REACH

## ■ Extra Options

-Lock&Key: Option
-Carbon Filter: Option

## ■ Bottle Loading Drawing

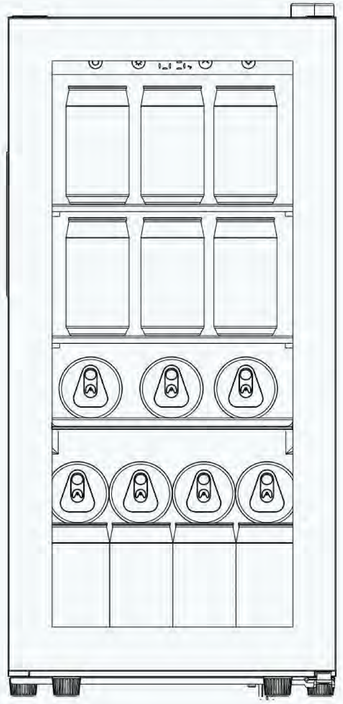

NEW ARRIVAL

## Capacity:

-Storage Capacity(330ml/11.02oz): 60cans

-Net Capacity: 45L

-Unit Size: W366xD476xH743mm

-Humidity Range: 50%-80%RH

# **Beverage Coolers** | Free Standing | Retro

Red

White

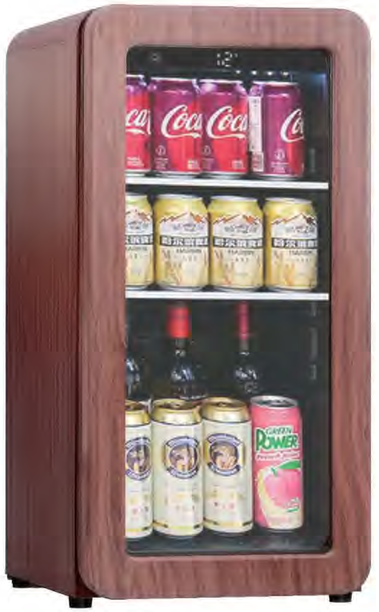

Wooden-like

## ■ Performance

-Temp.Zone: Single Zone
-ERP Class/Noise(dB(A)): G/39
-Temp.Range: 1~18℃

## ■ Packing/Loading

-Packing Size:
W416xD531xH795mm
-20'GP/40'HQ(pcs): 140/348

## ■ Common Features

-Foaming Agent/Refrigerant:
C-Pentane/R600a
-Control Type/Memory:
Touch Control/Yes
-UV-Proof Glass:
Yes ℃/℉ Switch/Yes
-Defrost Type: Auto-defrost
-Climate Type: SN,N,ST
-100% CFC/HFC Free

## ■ Features

-Cooling System: Comp/Fan Cooling
-Compressor: Huayi
-Air Ventilation: By Both Side
-Door Frame/Glass:
ABS/Retro/2-Layer Tempered Clear Glass
-Reversible Door: N/A
-Handle Type: Handleless
-Shelf: 5 Tempered Glass Shelves
-Display: Blue/White LED Display
-Lighting: White On Top
-Winter Care: N/A
-Cabinet/Plinth Vent Grille Color:
Black/Red/White/N/A
-Certificates: CB/CE/ROHS/REACH

## ■ Extra Options

-Lock&Key: N/A
-Carbon Filter: Option

## ■ Bottle Loading Drawing

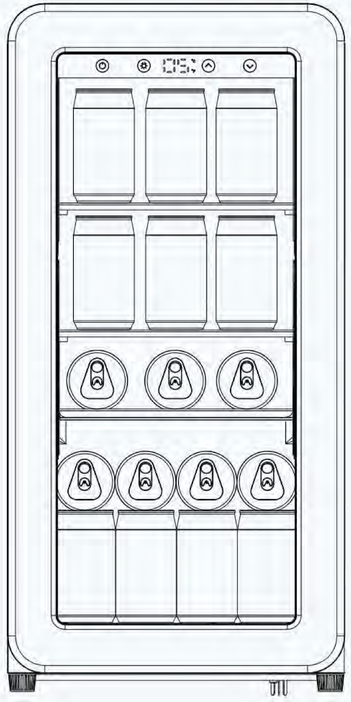

# **Beverage Coolers** | Free Standing | Retro

F

37 dB

## Capacity:

-Storage Capacity(330ml/11.02oz): 86Cans

-Net Capacity: 60L

-Unit Size: W366xD476xH928mm

-Humidity Range: 50%-80%RH

Red

White

## ■ Performance

-Temp.Zone: Single Zone
-ERP Class/Noise(dB(A)): F/37
-Temp.Range: 1~18℃

## ■ Packing/Loading

-Packing Size:
W416xD531xH980mm
-20'GP/40'HQ(pcs): 104/280

## ■ Common Features

-Foaming Agent/Refrigerant:
C-Pentane/R600a
-Control Type/Memory:
Touch Control/Yes
-UV-Prool Glass:
Yes,℃/ ℉ Switch,Yes
-Defrost Type: Auto-defrost
-Climate Type: SN,N,ST
-100% CFC/HFC Free

## ■ Features

-Cooling System: Comp/Fan Cooling
-Compressor: Huayi
-Air Ventilation: By Both Side
-Door Frame/Glass:
ABS/Hemo/Single Low-E
3-Layer,Tempered Clear Glass
-Reversible Door: N/A
-Handle Type: Handleless
-Shelf: 4 Tempered Glass Shelves
-Display: Blue/White LED Display
-Lighting: White On Top
-Winter Care: N/A
-Cabinet/Plinth Vent Grille Color:
Black/Red/White/N/A
-Certificates: CB/CE/RoHS/REACH

## ■ Extra Options

-Lock&Key: N/A
-Carbon Filter: Option

## ■ Bottle Loading Drawing

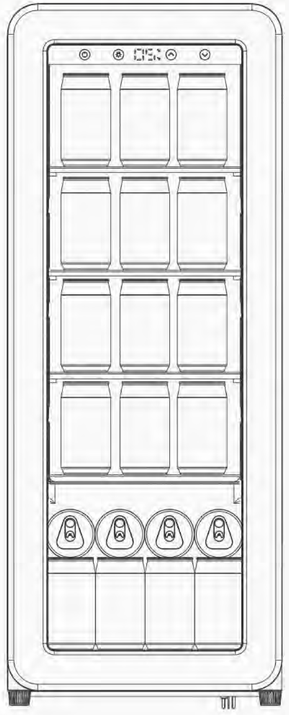

# **Cigar Humidors** | Desk | Classic

## Capacity:

-Storage Capacity: 260+Cigars

-Net Capacity: 27L

-Unit Size: W480xD430xH505mm

-Humidity Range: 60%-80%RH

45 Degree Corner SST Door

Full Glass Door

Wooden-like

## ■ Performance

-Temp.Zone: Single Zone
-ERP Class/Noise(dB(A)): /39
-Temp.Range: 16~22℃

## ■ Packing/Loading

-Packing Size:
W510xD460xH532mm
-20'GP/40'HQ(pcs): 220/560

## ■ Common Features

-Foaming Agent/Refrigerant:
C-Pentane/R600a
-Control Type/Memory:
Touch Control/Yes
-UV-Prool Glass:
Yes,℃/ ℉ Switch,Yes
-Defrost Type: Auto-defrost
-Climate Type: SN,N,ST
-100% CFC/HFC Free

## ■ Features

-Cooling System: Comp/Fan Cooling
-Compressor: Huayi
-Air Ventilation: By Both Side
-Door Frame/Glass:
Full Glass/2-Layer Tempered Clear Glass
-Reversible Door: Yes
-Handle Type: Recessed Handle
-Shelf: 2 Cedar Drawers
-Display: Blue/White LED Display
-Lighting: White On Top
-Winter Care: N/A
-Cabinet/Plinth Vent Grille Color:
Black/N/A
-Certificates: CB/CE/RoHS/REACH

## ■ Extra Options

-Lock&Key: Option
-Carbon Filter: N/A

## ■ Bottle Loading Drawing

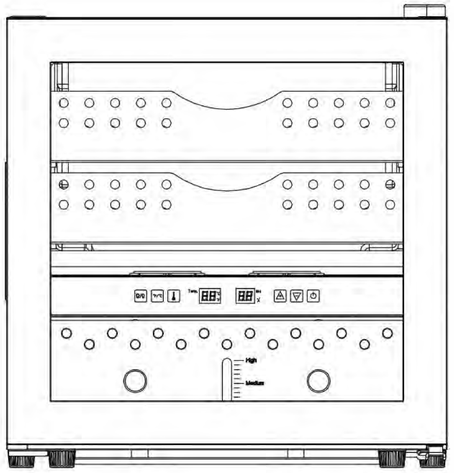

# **Cigar Humidor** | Free Standing | Retro

NEW ARRIVAL

## Capacity:

-Storage Capacity: 260+Cigars

-Net Capacity: 36L

-Unit Size: W366xD476xH743mm

-Humidity Range: 60%-80%RH

Black

White

Wooden-like

## ■ Performance

-Temp.Zone: Single Zone
-ERP Class/Noise(dB(A)): /39
-Temp.Range: 16~22℃

## ■ Packing/Loading

-Packing Size:
W416xD531xH795mm
-20'GP/40'HQ(pcs): 148/336

## ■ Common Features

-Foaming Agent/Refrigerant:
C-Pentane/R600a
-Control Type/Memory:
Touch Control/Yes
-UV-Prool Glass:
Yes,℃/ ℉ Switch,Yes
-Defrost Type: Auto-defrost
-Climate Type: SN,N,ST
-100% CFC/HFC Free

## ■ Features

-Cooling System: Comp/Fan Cooling
-Compressor: Huayi
-Air Ventilation: By Both Side
-Door Frame/Glass:
ABS/Retro/2-Layer Tempered Clear Glass
-Reversible Door;
-Handle Type: Handleless
-Shelf: 3 Cedar Drawers
-Display: Blue/White LED Display
-Lighting: White On Top
-Winter Care: Yes
-Cabinet/Plinth Vent Grille Color:
Black/Red/White/N/A
-Certificates: CB/CE/RoHS/REACH

## ■ Extra Options

-Lock&Key: N/A
-Carbon Filter: Option

## ■ Bottle Loading Drawing

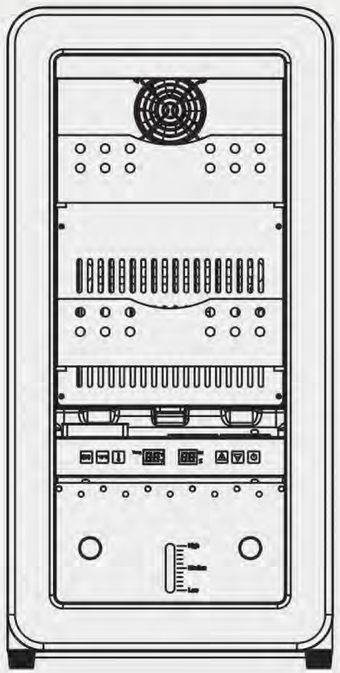

# **Cigar Humidor** | Free Standing | Retro

NEW ARRIVAL

## Capacity:

-Storage Capacity: 367+Cigars

-Net Capacity: 50L

-Unit Size: W366xD476xH928mm

-Humidity Range: 60%-80%RH

Red

White

Wooden-like

## ■ Performance

-Temp.Zone: Single Zone
-ERP Class/Noise(dB(A)): /39
-Temp.Range: 16-22°C

## ■ Packing/Loading

-Packing Size:
W416xD531xH980mm
-20'GP/40'HQ(pcs): 104/280

## ■ Common Features

-Foaming Agent/Refrigerant:
C-Pentane/R600a
-Control Type/Memory:
Touch Control/Yes
-UV-Proof Glass:
Yes °C/ °F Switch,Yes
-Defrost Type: Auto-defrost
-Climate Type: SN,N,ST
-100% CFC/HFC Free

## ■ Features

-Cooling System: Comp/Fan Cooling
-Compressor: Huayi
-Air Ventilation: By Both Side
-Door Frame/Glass:
ABS/Retro/2-Layer Tempered Clear Glass
-Reversible Door:
-Handle Type: Handleless
-Shelf: 4 Cedar Drawers
-Display: Blue/White LED Display
-Lighting: White On Top
-Winter Care: Yes
-Cabinet/Plinth Vent Grille Color:
Black/Red/White/N/A
-Certificates: CB/CE/RoHS/REACH

## ■ Extra Options

-Lock&Key: n/A
-Carbon Filter: Option

## ■ Bottle Loading Drawing

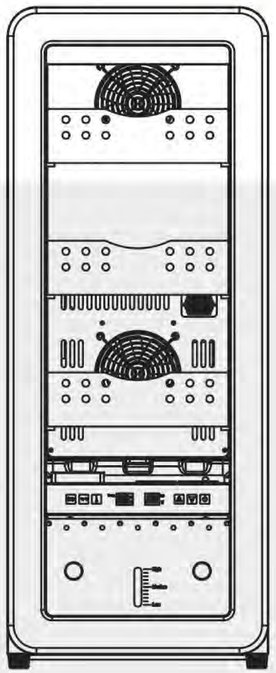

# **Cigar Humidors** | Free Standing | Classic

## Capacity:

-Storage Capacity: 680+Cigars

-Net Capacity: 76L

-Unit Size: W480xD430xH860mm

-Humidity Range: 60%-80%RH

45 Degree Corner SST Door

Full Glass Door

Gold Seamless SST Door

## ■ Performance

-Temp.Zone: Single Zone
-ERP Class/Noise(dB(A)): /39
-Temp.Range: 16~22℃

## ■ Packing/Loading

-Packing Size:
W510xD460xH885mm
-20'GP/40'HQ(pcs): 120/330

## ■ Common Features

-Foaming Agent/Refrigerant:
C-Pentane/R600a
-Control Type/Memory:
Touch Control/Yes
-UV-Prool Glass:
Yes,℃/ ℉ Switch,Yes
-Defrost Type: Auto-defrost
-Climate Type: SN,N,ST
-100% CFC/HFC Free

## ■ Features

-Cooling System: Comp/Fan Cooling
-Compressor: Huayi
-Air Ventilation: By Both Side
-Door Frame/Glass:
ABS/Retro/2-Layer Tempered Clear Glass
-Reversible Door: Yes
-Handle Type: Recesses Handle
-Shelf: 3 Cedar Drawers
-Display: Blue/White LED Display
-Lighting: White On Top
-Winter Care: Yes
-Cabinet/Plinth Vent Grille Color:
Black/N/A
-Certificates: CB/CE/RoHS/REACH

## ■ Extra Options

-Lock&Key: Optional
-Carbon Filter: N/A

## ■ Bottle Loading Drawing

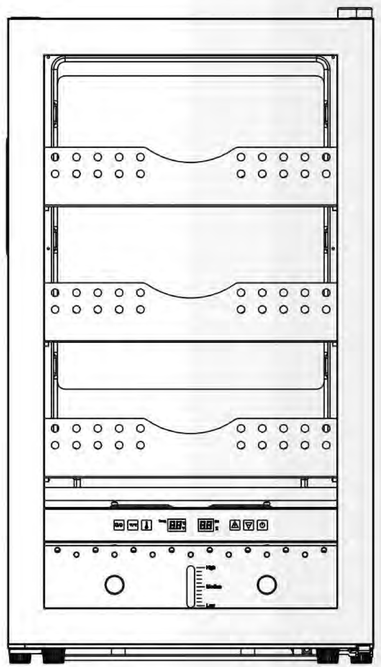

# **Cigar Humidors** | Free Standing | Classic

## Capacity:

-Storage Capacity: 1600+Cigars

-Net Capacity: 172L

-Unit Size: W490xD575xH1285mm

-Humidity Range: 60%-80%RH

Seamless SST Door

Full Glass Door

Gold Seamless SST Door

## ■ Performance

-Temp.Zone: Single Zone
-ERP Class/Noise(dB(A)): /39
-Temp.Range: 16-22°C

## ■ Packing/Loading

-Packing Size:
W630xD615xH1315mm
-20'GP/40'HQ(pcs): 32/160

## ■ Common Features

-Foaming Agent/Refrigerant:
C-Pentane/R600a
-Control Type/Memory:
Touch Control/Yes
-UV-Proof Glass:
Yes °C/ °F Switch Yes
-Defrost Type: Auto-defrost
-Climate Type: SN,N,ST
-100% CFC/HFC Free

## ■ Features

-Cooling System: Comp/Fan Cooling
-Compressor: LG
-Air Ventilation: By Both Side
-Door Frame/Glass:
Full Glass/2-LayerTempered Clear Glass
-Reversible Door: Yes
-Handle Type: Recesses Handle
-Shelf: 5 Cedar Drawers
-Display: Blue/White LED Display
-Lighting: White On Top
-Winter Care: Yes
-Cabinet/Plinth Vent Grille Color:
Black/N/A
-Certificates: CB/CE/RoHS/REACH

## ■ Extra Options

-Lock&Key: Optional
-Carbon Filter: Optional

## ■ Bottle Loading Drawing

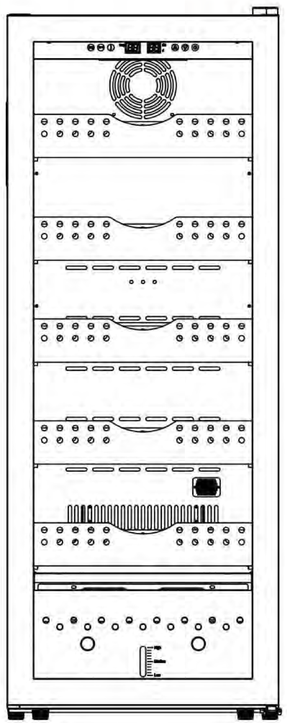

# **Cigar Humidors** | Free Standing | Classic

## Capacity:

-Storage Capacity: 680+Cigars

-Net Capacity: 170L

-Unit Size: W490xD575xH1285mm

-Humidity Range: 60%-80%RH

Seamless SST Door

Full Glass Door

Gold Seamless SST Door

## ■ Performance

-Temp.Zone: Dual Zone
-ERP Class/Noise(dB(A)): /39
-Temp.Range: Upper 16-22℃
Lower 5-20℃

## ■ Packing/Loading

-Packing Size:
W530xD615xH1315mm
-20'GP/40'HQ(pcs): 52/160

## ■ Common Features

-Foaming Agent/Refrigerant:
C-Pentane/R600a
-Control Type/Memory:
Touch Control/Yes
-UV-Prool Glass:
Yes,℃/℉ Switch,Yes
-Defrost Type: Auto-defrost
-Climate Type: SN,N,ST
-100% CFC/HFC Free

## ■ Features

-Cooling System: Comp/Fan Cooling
-Compressor: Jiaxipera
-Air Ventilation: By Both Side
-Door Frame/Glass:
Full Glass/2-LayerTempered Clear Glass
-Reversible Door: Yes
-Handle Type: Recessed Handle
-Shelf: 2 Cedar Drawers+4 Beech Shelves
-Display: Blue/White LED Display
-Lighting: White On Top
-Winter Care: Yes
-Cabinet/Plinth Vent Grille Color:
Black/N/A
-Certificates: CB/CE/RoHS/REACH

## ■ Extra Options

-Lock&Key: Option
-Carbon Filter: Option

## ■ Bottle Loading Drawing

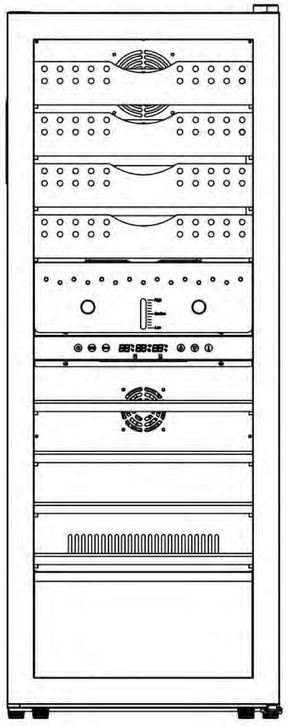

# **Steak Agers** | Bulid under | Classic

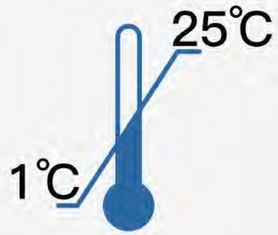


## Capacity:

-Storage Capacity: Up to 45kg

-Net Capacity: 110L

-Unit Size: W595xD575xH820mm

-Humidity Range: 60%-85%RH

45 Degree Corner SST Door

Full Glass Door

## ■ Performance

-Temp.Zone: Single Zone
-ERP Class/Noise(dB(A)): B/39
-Temp.Range: 1~25°C

## ■ Packing/Loading

-Packing Size:
W650xD625xH880mm
-20'GP/40'HQ(pcs): 54/170

## ■ Common Features

-Foaming Agent/Refrigerant:
C-Pentane/R600a
-Control Type/Memory:
Touch Control/Yes
-UV-Proof Glass:
Yes °C/ °F Switch Yes
-Defrost Type: Auto-defrost
-Climate Type: SN,N,ST
-100% CFC/HFC Free

## ■ Features

-Cooling System:
Comp/Fan Cooling W/UVC
-Compressor: Inverter/ Embraco
-Air Ventilation: By Plinth Vent Grille
-Door Frame/Glass:
Seamless SS1/Double Low-E
3-Layer Tempered Light Blue Glass
-Reversible Door: Yes
-Handle Type: SST Handle
-Shelf: 1 SST Hanging Rod+ 3 SST Hanger
+ 2 SST Shelf + 1 SST Salt Tray
-Display: Blue/White LED Display
-Lighting: Both Side
-Winter Care: Yes
-Cabinet/Plinth Vent Grille Color:
Black/SST
-Certificates: CB/CE/RoHS/REACH

## ■ Extra Options

-Lock&Key: Option
-Carbon Filter: Option

## ■ Installation Drawing:Build-under

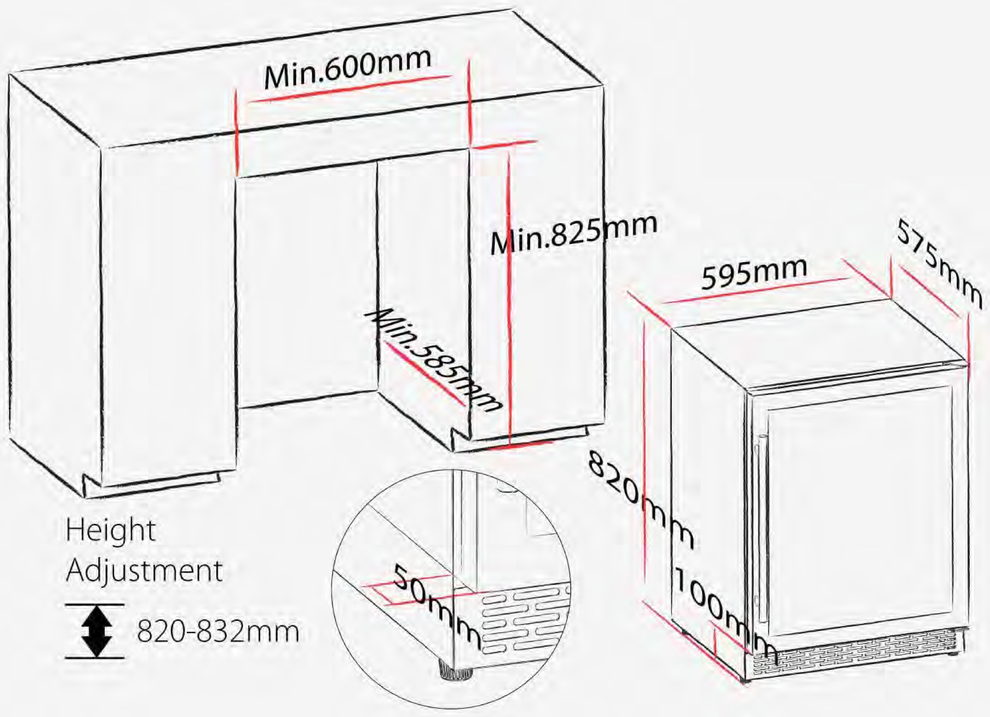

# Steak Agers | Free Standing | Classic

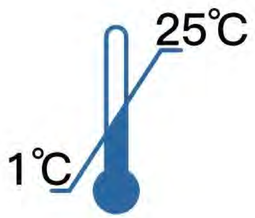


## Capacity:

-Storage Capacity: Up to 105kg

-Net Capacity: 172L

-Unit Size: W490xD575xH1285mm

-Humidity Range: 60%-85%RH

45 Degree Corner SST Door

Full Glass Door

## Performance

-Temp.Zone: Single Zone
-ERP Class/Noise(dB(A)): B/39
-Temp.Range: 1-25℃

## Packing/Loading

-Packing Size:
W490xD575xH1285mm
-20'GP/40'HQ(pcs): 52/164

## Common Features

-Foaming Agent/Refrigerant:
C-Pentane/R600a
-Control Type/Memory:
Touch Control/Yes
-UV-Prool Glass:
Yes ℃/ ℉ Switch/Yes
-Defrost Type: Auto-defrost
-Climate Type: SN,N,ST
-100% CFC/HFC Free

## Features

-Cooling System:
Comp/Fan Cooling W/UVC
-Compressor: Inverter/Jiaxipera
-Air Ventilation: By Plinth Vent Grille
-Door Frame/Glass:
Seamless SST/Double Low-E
3-Layer,Tempered Light Blue Glass
-Reversible Door: Yes
-Handle Type: SST Handle
-Shelf: 1SST Hanging Pod+3 SST Hanger+
1 3 SST Shelf+1 SST Soft Tray+
-Display: Blue/White LED Display
-Lighting: Both Side
-Winter Care: Yes
-Cabinet/Plinth Vent Grille Color:
Black/SST
-Certificates: CB/CE/RoHS/REACH

## Extra Options

-Lock&Key: Option
-Carbon Filter: Option

# **Steak Agers** | Free Standing | Classic

## Capacity:

-Storage Capacity: Up to 135kg

-Net Capacity: 425L

-Unit Size: W598xD701xH1772mm

-Humidity Range: 60%-85%RH

45 Degree Corner SST Door

Full Glass Door

## ■ Performance

-Temp.Zone: Single Zone
-ERP Class/Noise(dB(A)): B/39
-Temp.Range: 1-25°C

## ■ Packing/Loading

-Packing Size:
W655xD770xH1930mm
-20'GP/40'HQ(pcs): 24/54

## ■ Common Features

-Foaming Agent/Refrigerant:
C-Pentane/R600a
-Control Type/Memory:
Touch Control/Yes
-UV-Proof Glass:
Yes ℃/ ℉ Switch,Yes
-Defrost Type: Auto-defrost
-Climate Type: SN,N,ST
-100% CFC/HFC Free

## ■ Features

-Cooling System:
Comp/Fan Cooling W/UVC
-Compressor: Inverter/Embraco
-Air Ventilation: By Plinth Vent Grille
-Door Frame/Glass:
Seamless SS1/Double Low-E
3-Layer Tempered Light Blue Glass
-Reversible Door: Yes
-Handle Type: SST Handle
-Shelf: 1 SST Hanging Rod+3 SST Hangers
+4 SST Shelf + 1 SST Salt Tray
-Display: Blue/White LED Display
-Lighting: Both Side
-Winter Care: Yes
-Cabinet/Plinth Vent Grille Color:
Black/SST
-Certificates: CB/CE/RoHS/REACH

## ■ Extra Options

-Lock&Key: W/Lock
-Carbon Filter: Option

# **Steak Agers** | Build under | Classic

## Capacity:

-Storage Capacity: Up to 135kg

-Net Capacity: 425L

-Unit Size: W598xD680xH1818mm

-Humidity Range: 60%-85%RH

45 Degree Corner SST Door

Full Glass Door

## ■ Performance

-Temp.Zone: Single Zone
-ERP Class/Noise(dB(A)): B/38
-Temp.Range: 1-25℃

## ■ Packing/Loading

-Packing Size:
W655xD750xH1980mm
-20'GP/40'HQ(pcs): 24/54

## ■ Common Features

-Foaming Agent/Refrigerant:
C-Pentane/R600a
-Control Type/Memory:
Touch Control/Yes
-UV-Prool Glass:
Yes ℃/ ℉ Switch/Yes
-Defrost Type: Auto-defrost
-Climate Type: SN,N,ST
-100% CFC/HFC Free

## ■ Features

-Cooling System:
Comp/Fan Cooling W/UVC
-Compressor: Inverter/Embraco
-Air Ventilation: By Plinth Vent Grille
-Door Frame/Glass:
Seamless SST/Double Low-E
3-Layer Tempered Light Blue Glass
-Reversible Door: Yes
-Handle Type: SST Handle
-Shelf: 1 SST Hanging Rod+3 SST Hangers
+4 SST Shelf+1 SST Salt Tray
-Display: Blue/White LED Display
-Lighting: Both Side
-Winter Care: Yes
-Cabinet/Plinth Vent Grille Color:
Black/SST
-Certificates: CB/CE/RoHS/REACH

## ■ Extra Options

-Lock&Key: W/Lock
-Carbon Filter: Optional

## ■ Installation Drawing:Build-under

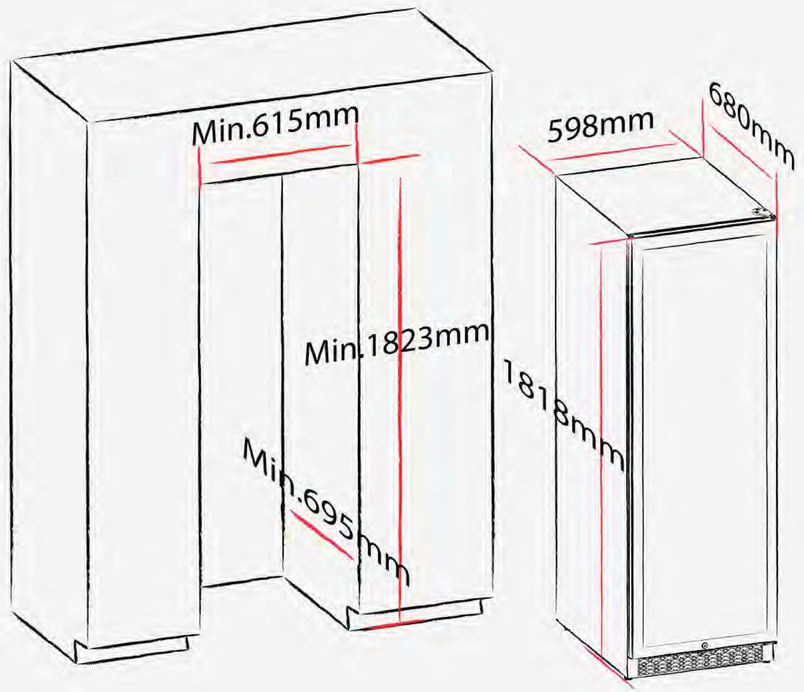

# Handle Options